TOWN OF WAITSFIELD
WAITSFIELD, VERMONT

COMMUNITY WASTEWATER SYSTEM

CONTRACT NO. 2

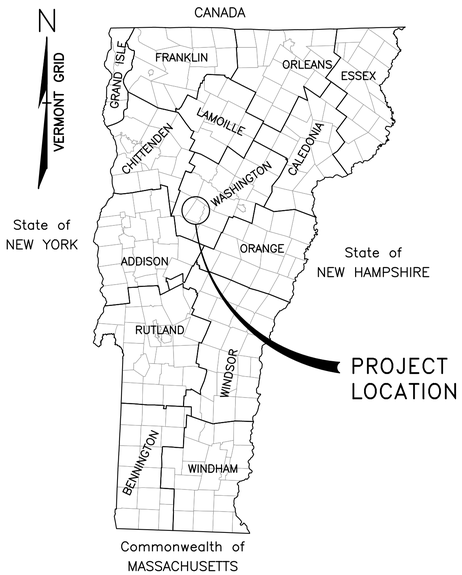

LOCATION MAP
NOT TO SCALE

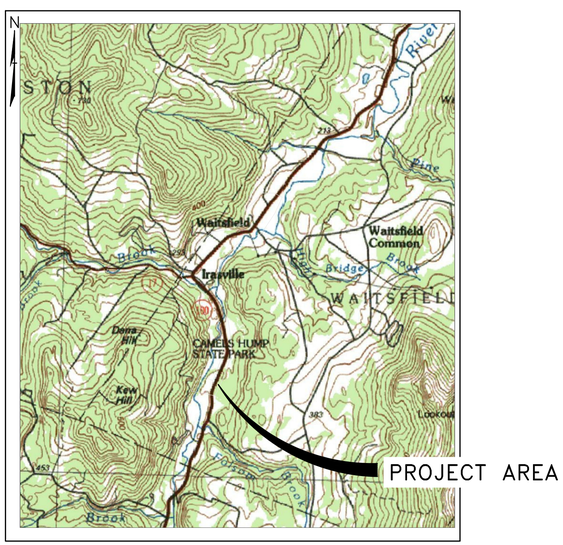

PROJECT AREA PLAN
SCALE: 1" = 5,000 FEET ±

DuBois & King inc.
engineering
planning
management
development

BID SET
NOT FOR CONSTRUCTION 7/16/2026

DuBois & King inc.
www.dubois-king.com
© Copyright 2026 DuBois & King inc.

STATE OF VERMONT
JASON BRIAN ASHE
No. 9000
PROFESSIONAL ENGINEER
07-16-2026
BID SET
NOT FOR CONSTRUCTION

REVISIONS			
NUMBER	DATE	REVISION DESCRIPTION	BY

CLIENT NAME
TOWN OF WAITSFIELD

PROJECT NAME
WAITSFIELD COMMUNITY WASTEWATER SYSTEM

PROJECT ADDRESS
4144 MAIN STREET
WAITSFIELD, VERMONT 05673

SHEET TITLE
CONTRACT NO. 2
TITLE SHEET

D&K PROJECT #	PROJ. ENG.
227947	JBA
DRAWN BY	CHECKED BY
EBS	DDC

DATE
JULY 2026

SHEET NUMBER
G1

SHEET: 1 of 86

I:\21\227947 Waitsfield Water and Wastewater Feasibility Stud\Drawings\Civil\227947-TTL002.DWG 8/27/2026 10:18 AM

LEGEND

EXISTING

- MAJOR CONTOUR
- MINOR CONTOUR
- EDGE OF PAVEMENT
- EDGE OF GRAVEL
- EDGE OF SHOULDER
- PROPERTY LINE
- RIGHT OF WAY
- TREE LINE
- UE — UNDER GROUND ELECTRICAL
- UGC — UNDER GROUND CABLE
- W — WATER MAIN
- S — SEWER
- SD — STORM DRAIN
- O — FENCE
- STONE WALL
- WL — WETLAND
- WB — WETLAND BUFFER
- RC — RIVER CORRIDOR
- ZA — ZONE A FLOOD ZONE
- ZAE — ZONE AE FLOOD ZONE
- ZX — ZONE X FLOOD ZONE
- BUILDING
- LEDGE OUTCROP
- BENCH MARK
- CATCH BASIN
- T — TELEPHONE MANHOLE
- S — SEWER MANHOLE
- MH — MANHOLE
- G — GAS MANHOLE
- E — ELECTRICAL MANHOLE
- WELL
- UTILITY POLE
- CONTROL POINT
- LIGHT POLE
- SIGN (2 POST)
- SIGN (1 POST)
- GAS VALVE
- HYDRANT
- IRON PIPE FOUND
- WATER SHUT OFF
- GAS SHUT OFF
- TREE
- GUY WIRE
- STONE BOUND
- MAILBOX
- B — BORING
- TP — TEST PIT
- MW — MONITORING WELL
- HAZ — HAZARDOUS WASTE SITE
- APPROX. LOC. LEACHFIELD AND SEPTIC TANKS

NEW

- S — SEWER MAIN
- SS — SEWER SERVICE
- FM — FORCE MAIN
- FMS — FORCE MAIN SERVICE
- WS — WATER SERVICE
- S — SEWER MANHOLE
- VV — VALVE VAULT
- AR — AIR RELEASE
- PS — PUMP STATION
- FMV — FORCE MAIN VALVE
- CO — ONE WAY CLEANOUT
- CO — TWO WAY CLEANOUT
- SEWER SERVICE
- WATER SERVICE
- DIRECTIONAL DRILL
- JACK AND BORE
- VAOT MM 1.5 +/- — VAOT MILE MARKER STATIONING
- UGS — UNDERGROUND SIGNAL
- UGES — UNDERGROUND ELECTRICAL AND SIGNAL
- SILT FENCE
- STABILIZED CONSTRUCTION ENTRANCE
- LOD — LIMITS OF DISTURBANCE
- PDF — PROJECT DEMARCATION FENCE
- PERMANENT EASEMENT
- TEMPORARY EASEMENT

LIST OF DRAWINGS

SHEET TITLE	SHEET DESCRIPTION	SHEET NO.
TITLE SHEET	G1	1 OF 86
LIST OF SHEETS – LEGEND	G2	2 OF 86
INDEX OF SHEETS	G3	3 OF 86
GENERAL NOTES	G4	4 OF 86
PRESSURE AND LEAKAGE TESTING NOTES	G5	5 OF 86
PLAN AND PROFILE STA. 1+00 – 4+50	C1	6 OF 86
PLAN AND PROFILE STA. 4+50 – 9+50	C2	7 OF 86
PLAN AND PROFILE STA. 9+50 – 14+50	C3	8 OF 86
PLAN AND PROFILE STA. 14+50 – 19+50	C4	9 OF 86
PLAN AND PROFILE STA. 19+50 – 24+50	C5	10 OF 86
PLAN AND PROFILE STA. 24+50 – 29+50	C6	11 OF 86
PLAN AND PROFILE STA. 29+50 – 34+50	C7	12 OF 86
PLAN AND PROFILE STA. 34+50 – 39+50	C8	13 OF 86
PLAN AND PROFILE STA. 39+50 – 44+50	C9	14 OF 86
PLAN AND PROFILE STA 44+50 – 49+50	C10	15 OF 86
PLAN AND PROFILE STA 49+50 – 54+50	C11	16 OF 86
PLAN AND PROFILE STA 54+50 – 59+50	C12	17 OF 86
PLAN AND PROFILE STA 59+50 – 64+50	C13	18 OF 86
PLAN AND PROFILE STA 64+50 – 69+50	C14	19 OF 86
PLAN AND PROFILE STA 69+50 – 74+50	C15	20 OF 86
PLAN AND PROFILE STA 74+50 – 79+50	C16	21 OF 86
PLAN AND PROFILE STA 79+50 – 84+50	C17	22 OF 86
PLAN AND PROFILE STA 84+50 – 89+50	C18	23 OF 86
PLAN AND PROFILE STA 89+50 – 94+50	C19	24 OF 86
PLAN AND PROFILE STA 94+50 – 99+50	C20	25 OF 86
PLAN AND PROFILE STA 99+50 – 104+50	C21	26 OF 86
PLAN AND PROFILE STA 104+50 – 109+50	C22	27 OF 86
PLAN AND PROFILE STA 109+50 – 113+00	C23	28 OF 86
PLAN AND PROFILE STA 113+00 – 118+00	C24	29 OF 86
PLAN AND PROFILE STA 118+00 – 123+00	C25	30 OF 86
PLAN AND PROFILE STA 123+00 – 128+00	C26	31 OF 86
PLAN AND PROFILE STA 128+00 – 133+00	C27	32 OF 86
PLAN AND PROFILE STA 133+00 – 138+00	C28	33 OF 86
PLAN AND PROFILE STA 138+00 – 143+00	C29	34 OF 86
PLAN AND PROFILE STA 143+00 – 148+00	C30	35 OF 86
PLAN AND PROFILE STA 148+00 – 153+00	C31	36 OF 86
PLAN AND PROFILE STA 153+00 – 158+00	C32	37 OF 86
PLAN AND PROFILE STA 158+00 – 163+00	C33	38 OF 86
PLAN AND PROFILE STA 163+00 – 168+00	C34	39 OF 86
SERVICE EXTENSIONS SHEET 1 OF 4	C35	40 OF 86
SERVICE EXTENSIONS SHEET 2 OF 4	C36	41 OF 86
SERVICE EXTENSIONS SHEET 3 OF 4	C37	42 OF 86
SERVICE EXTENSIONS SHEET 4 OF 4	C38	43 OF 86
PLAN AND PROFILE FIDDLERS GREEN BRANCH 1 OF 2	C39	44 OF 86
PLAN AND PROFILE FIDDLERS GREEN BRANCH 2 OF 2	C40	45 OF 86
PLAN AND PROFILE BUTCHER HOUSE DRIVE	C41	46 OF 86
PLAN AND PROFILE IRASVILLE NORTH BRANCH	C42	47 OF 86
PLAN AND PROFILE MAD RIVER GREEN BRANCH	C43	48 OF 86
PLAN AND PROFILE SLOW ROAD BRANCH	C44	49 OF 86
PLAN AND PROFILE BRIDGE STREET SOUTH BRANCH	C45	50 OF 86
PLAN AND PROFILE FARR LANE BRANCH	C46	51 OF 86
PLAN AND PROFILE PARSONAGE LANE BRANCH	C47	52 OF 86
PLAN AND PROFILE CHURCH BRANCH	C48	53 OF 86
PLAN AND PROFILE OLD COUNTY ROAD 1 OF 2	C49	54 OF 86
PLAN AND PROFILE OLD COUNTY ROAD 2 OF 2	C50	55 OF 86
PLAN AND PROFILE SCHOOL PUMP STATION BRANCH	C51	56 OF 86
HYDRAULIC PROFILE	C52	57 OF 86
FIDDLERS GREEN PUMP STATION	C53	58 OF 86
UPPER IRASVILLE PUMP STATION	C54	59 OF 86
BRIDGE STREET SOUTH PUMP STATION	C55	60 OF 86
CHURCH PUMP STATION	C56	61 OF 86
SCHOOL PUMP STATION	C57	62 OF 86
SEWER AND TRENCH DETAILS	C58	63 OF 86
FORCE MAIN DETAILS	C59	64 OF 86
SEWER SERVICE DETAILS	C60	65 OF 86
WATER AND TRENCH DETAILS	C61	66 OF 86
WATER SERVICE DETAILS	C62	67 OF 86
GENERAL DETAILS	C63	68 OF 86
PUMP STATION DETAILS	C64	69 OF 86
SEPTIC TANK DETAILS	C65	70 OF 86
EPSC DETAILS	C66	71 OF 86
SQUARE TUBE SIGN POST AND ANCHOR	C67	72 OF 86
STANDARD SIGN PLACEMENT	C68	73 OF 86
NOTES	S0.1	74 OF 86
TYPICAL DETAILS	S0.2	75 OF 86
FIDDLER GREEN PUMP STATION PLAN AND DETAILS	S1.0	76 OF 86
SCHOOL PUMP STATION PLAN AND DETAILS	S1.1	77 OF 86
UPPER IRASVILLE PUMP STATION PLAN AND DETAILS	S1.2	78 OF 86
SCHOOL SEPTIC TANK PLAN AND DETAILS	S1.3	79 OF 86
FIDDLERS GREEN PUMP STATION PLAN – ELECTRICAL PLAN	E1.1	80 OF 86
UPPER IRASVILLE PUMP STATION – ELECTRICAL PLAN	E1.2	81 OF 86
BRIDGE STREET SOUTH PUMP STATION – ELECTRICAL PLAN	E1.3	82 OF 86
CHURCH PUMP STATION – ELECTRICAL PLAN	E1.4	83 OF 86
SCHOOL PUMP STATION – ELECTRICAL PLAN	E1.5	84 OF 86
ELECTRICAL DETAILS	E5.1	85 OF 86
ELECTRICAL DETAILS	E5.2	86 OF 86

NOTE:

CONTRACTOR TO REFER TO EPSC PLANS FOR EROSION CONTROL

BID SET
NOT FOR CONSTRUCTION 7/16/2026

DuBois & King inc.
www.dubois-king.com
© Copyright 2026 DuBois & King inc.

STATE OF VERMONT — JAMES B. ASHE — 10,000 — PROFESSIONAL ENGINEER — 07-16-2026

BID SET
NOT FOR CONSTRUCTION

REVISIONS

NUMBER	DATE	REVISION DESCRIPTION	BY

CLIENT NAME
TOWN OF WAITSFIELD

PROJECT NAME
WAITSFIELD COMMUNITY WASTEWATER SYSTEM

PROJECT ADDRESS
4144 MAIN STREET
WAITSFIELD, VERMONT 05673

SHEET TITLE
CONTRACT NO. 2
LIST OF SHEETS - LEGEND

D&K PROJECT #	PROJ. ENG.
227947	JBA
DRAWN BY	CHECKED BY
EBS	DDC

DATE
JULY 2026

SHEET NUMBER
G2

SHEET: 2 of 86

I:\2\227947 Waitsfield Water and Wastewater Feasibility Stud\Drawings\Civil\227947-TTL002.DWG 8/27/2026 10:18 AM

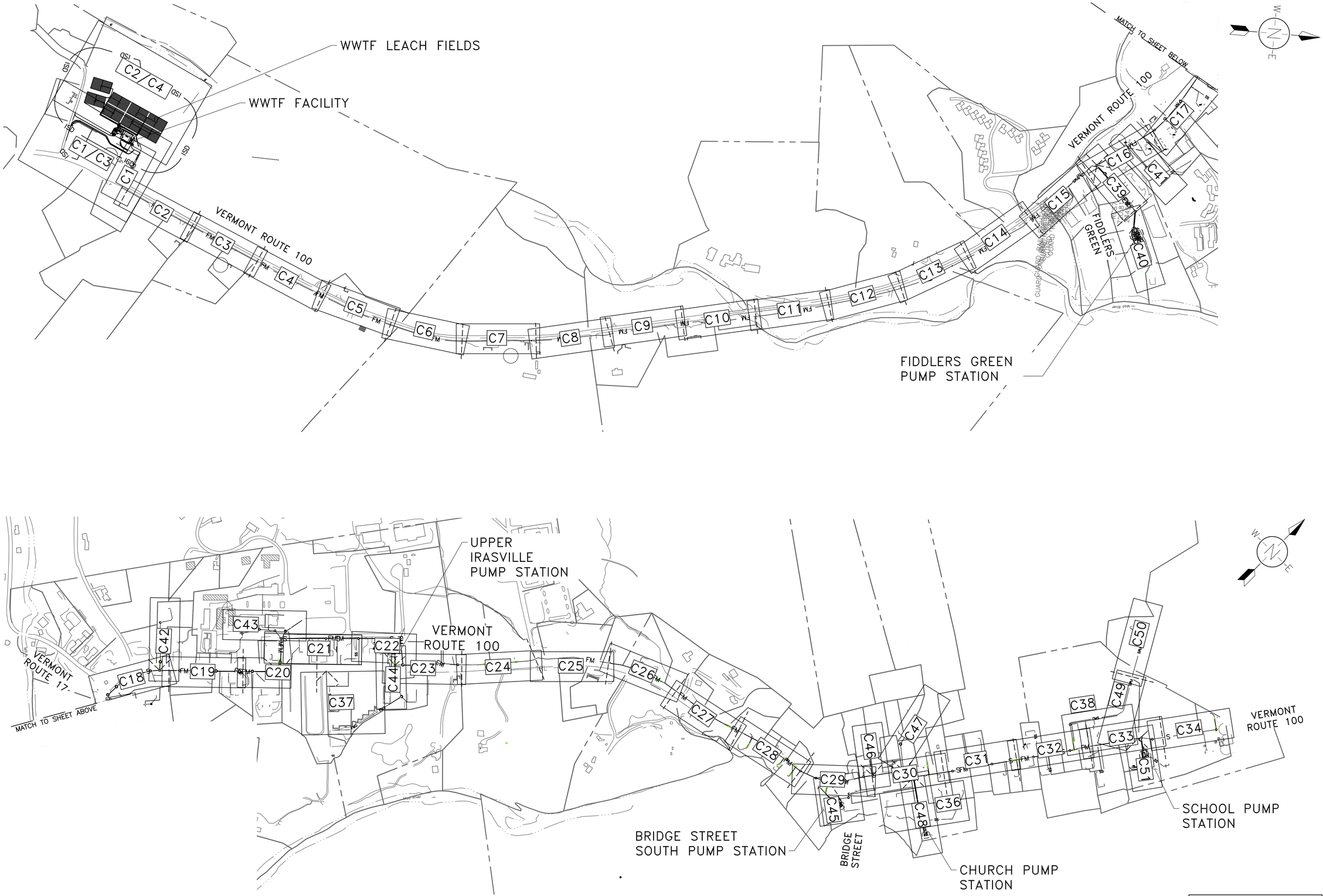

BID SET
NOT FOR CONSTRUCTION 7/16/2026

DuBois & King inc.
www.dubois-king.com
© Copyright 2026 DuBois & King inc.

STATE OF VERMONT
ASHLEY B. BUCKLEY
PROFESSIONAL ENGINEER
07-16-2026

BID SET
NOT FOR CONSTRUCTION

REVISIONS			
NUMBER	DATE	REVISION DESCRIPTION	BY

CLIENT NAME
TOWN OF WAITSFIELD

PROJECT NAME
WAITSFIELD COMMUNITY WASTEWATER SYSTEM

PROJECT ADDRESS
4144 MAIN STREET
WAITSFIELD, VERMONT 05673

SHEET TITLE
CONTRACT NO. 2
INDEX OF SHEETS

D&K PROJECT #	PROJ. ENG.
227947	JBA
DRAWN BY	CHECKED BY
EBS	DDC

DATE
JULY 2026

SHEET NUMBER
G3

SHEET: 3 of 86

I:\21\227947 Waitsfield Water and Wastewater Feasibility Stud\Drawings\Civil\Sheet Breakouts\227947-sheet index.dwg 8/27/2026 10:19 AM

CONSTRUCTION NOTES

1. CONTRACTOR TO BE RESPONSIBLE FOR MAINTAINING FUNCTION OF EXISTING UTILITIES (WATER, SEWER AND STORM DRAIN SYSTEMS) DURING INSTALLATION OF NEW UTILITIES, AND UNTIL NEW UTILITIES ARE INSTALLED, TESTED, ACCEPTED AND PLACED INTO SERVICE. THE COST ASSOCIATED WITH MAINTAINING EXISTING UTILITY FUNCTION SHALL BE PART OF THE UNIT PRICE OF UTILITY INSTALLED.
2. CONTRACTOR SHALL PROVIDE NEW GRAVEL AND CRUSHED GRAVEL AS SPECIFIED WITH THE TRENCH RESTORATION PRIOR TO PLACING TEMPORARY PAVEMENT.
3. ALL LAWNS AND WALKS SHALL BE REPAIRED BY THE CONTRACTOR AS PART OF THE UNIT PRICE OF UTILITY INSTALLED.
4. CONTRACTOR SHALL COORDINATE WITH UTILITY COMPANIES FOR TEMPORARY SUPPORT OF UTILITY POLES.
5. THE CONTRACTOR MUST PROVIDE A MINIMUM OF ONE LANE OF TRAFFIC ALONG PUBLIC ROADWAYS FOR THE DURATION OF THE PROJECT.
6. CONTRACTOR SHALL REPLACE PAVEMENT STRIPING REMOVED DURING INSTALLATION OF UTILITY IMPROVEMENTS.
7. CONTRACTOR RESPONSIBLE FOR MAINTAINING ALL NECESSARY SEPARATIONS FROM SEPTIC AND SEWER PROVIDING PROPER MITIGATION WHEN SEPARATION DISTANCES CANNOT BE ACHIEVED. SEE SPECIFICATIONS FOR DETAILS.
8. CONTRACTOR SHALL VERIFY ALL EXISTING UTILITIES BEFORE CONSTRUCTION AND BEFORE ORDERING ANY PRECAST STRUCTURES.

MATERIAL SPECIFICATIONS:

1. SEE SPECIFICATIONS SECTION.

.

GENERAL NOTES

1. GENERAL NOTES APPLY TO ALL DRAWINGS IN THE CONTRACT DOCUMENTS, AND DRAWING NOTES APPLY ONLY TO THOSE DRAWINGS ON WHICH THEY APPEAR.
2. THE CONTRACTOR SHALL COORDINATE CONSTRUCTION PROCEDURES, SCHEDULES, TRAFFIC CONTROL, AND EQUIPMENT WITH THE OWNER. THE CONTRACTOR SHALL COORDINATE THEIR CONSTRUCTION SCHEDULE WITH ANY AND ALL AFFECTED UTILITIES IN ORDER TO PREVENT UNNECESSARY DELAYS IN THE WORK, AND/OR INTERRUPTION OF SERVICE.
3. THE CONTRACTOR SHALL BE RESPONSIBLE FOR ANY DAMAGE TO EXISTING PAVEMENT AND ROADWAYS OUTSIDE THE WORK AREA. THE CONTRACTOR SHALL REPAIR, AT NO COST TO THE OWNER, ALL DAMAGED AREAS RESULTING FROM THEIR OPERATIONS OR THEIR SUB-CONTRACTORS. ANY AREAS OUTSIDE THE WORK AREA DISTURBED BY THE OPERATIONS OF THE CONTRACTOR SHALL BE RESTORED TO ORIGINAL CONDITIONS, REGARDLESS OF WHETHER THE RESTORATION IS SHOWN ON THE DRAWINGS.
4. THE CONTRACTOR SHALL PROVIDE TRAFFIC CONTROL AND MAINTAIN TRAFFIC IN A SAFE MANNER THROUGHOUT THE CONSTRUCTION ACTIVITIES.
5. THE LOCATION OF EXISTING UNDERGROUND UTILITIES ARE SHOWN IN AN APPROXIMATE WAY ONLY AND HAVE NOT BEEN INDEPENDENTLY VERIFIED BY THE OWNER OR ITS REPRESENTATIVE.
6. THE CONTRACTOR SHALL DETERMINE THE EXACT LOCATION OF ALL EXISTING UTILITIES BEFORE COMMENCING WORK, AND AGREES TO BE FULLY RESPONSIBLE FOR ANY AND ALL DAMAGES WHICH MIGHT BE OCCASIONED BY THE CONTRACTORS FAILURE TO EXACTLY LOCATE AND PRESERVE ANY AND ALL UNDERGROUND UTILITIES.
7. CONTRACTORS SHALL COORDINATE WITH DIG-SAFE (1-888-344-7233) A MINIMUM OF 72 HOURS PRIOR TO ANY EXCAVATION. DIG-SAFE SHALL BE NOTIFIED "FOR EXCAVATION ACTIVITIES CONDUCTED WITHIN 100 FEET OF AN UNDERGROUND UTILITY FACILITY." CONTRACTOR SHALL "PREMARK PROPOSED EXCAVATION AREAS BEFORE CALLING DIG-SAFE."
8. ALL AREAS BEYOND THE LIMITS OF CONSTRUCTION WHICH ARE DISTURBED OR DAMAGED BY THE CONTRACTOR SHALL BE RESTORED TO THEIR ORIGINAL CONDITION BY THE CONTRACTOR AT NO COST TO THE OWNER.
9. ANY PROPERTY LINES SHOWN ON THESE DRAWINGS ARE APPROXIMATE ONLY, AND SHOWN ONLY FOR REFERENCE.
10. BEARINGS ARE BASED ON VERMONT STATE PLANE GRID NORTH.
11. TOPOGRAPHIC INFORMATION DEVELOPED FROM SURVEY PERFORMED ON 9/5/25, BY DUBOIS AND KING INC.
12. ELEVATIONS ARE BASED ON NAVD88 DATUM. HORIZONTAL POSITIONS ARE BASED ON NAD83 DATUM
13. THE PROPERTY LINES, EASEMENTS, AND OTHER REAL PROPERTY DESCRIPTIONS PROVIDED IN THESE PLANS DO NOT DEFINE LEGAL RIGHTS OR MEET LEGAL REQUIREMENTS FOR A LAND SURVEY AND SHALL NOT BE USED IN LIEU OF A SURVEY AS THE BASIS OF ANY LAND TRANSFER OR ESTABLISHMENT OF ANY PROPERTY RIGHT.

ELECTRICAL GENERAL NOTES

1. COORDINATE ALL ELECTRICAL SITE WORK WITH THE SITE TRADES FOR EXCAVATION AND BACKFILL OF TRENCHES ASSOCIATED WITH ALL UNDERGROUND CONDUITS.
2. THE DISTANCE BETWEEN HANDHOLES SHALL NOT EXCEED THREE HUNDRED FEET. ALL CONDUIT SWEEPS TURNED UP IN EQUIPMENT SLABS SHALL BE INSTALLED AS RIGID STEEL GALVANIZED CONDUIT. GROUND STEEL CONDUITS IN ACCORDANCE WITH APPLICABLE CODES.
3. ALL EMPTY CONDUITS SHALL CONTAIN A NYLON PULL ROPE AND BE CAPPED AT BOTH ENDS.
4. PROVIDE HANDHOLE BOXES AND EXTENSIONS TO ALLOW FOR CONDUIT BURIAL DEPTHS AND CONDUIT/BOX FILL CODE REQUIREMENTS.
5. ALL CONDUITS INSTALLED BELOW GRADE SHALL BE SCHEDULE 80 PVC MINIMUM, UNLESS OTHERWISE NOTED OR SHOWN ON THE DRAWINGS.
6. THE ELECTRICAL CONTRACTOR SHALL BE RESPONSIBLE FOR ALL PRE-CAST CONCRETE, PULL BOXES AND HANDHOLES PROCUREMENT AND INSTALLATION.
7. SEE CIVIL DRAWINGS FOR ADDITIONAL INFORMATION AND REQUIREMENTS.

SOIL EROSION & SEDIMENTATION CONTROL

1. THIS PROJECT SHALL FOLLOW THE LOW RISK SITE HANDBOOK (2025) AT A MINIMUM.
2. PROJECT TOTAL DISTURBANCE AREA IS APPROXIMATELY 9.5 ACRES.
3. TOTAL CONCURRENT DISTURBANCE TO BE 2 ACRES OR LESS AT ANY ONE TIME. THIS IS ANTICIPATED TO BE ACHIEVED THROUGH THE CONSTRUCTION PROCESS, WHICH TYPICALLY CONSIST OF ONGOING STABILIZATION ONCE THE SEWER MAIN TRENCH HAS BEEN EXCAVATED, PIPING INSTALLED, AND BACKFILLED TO FINAL GRADE.
4. RECEIVING WATERS ARE THE MAD RIVER AND UNNAMED CLASS II WETLANDS.
5. CONTRACTOR SHALL CONSTRUCT TEMPORARY AND PERMANENT EROSION AND SEDIMENTATION CONTROL FACILITIES PRIOR TO THE COMMENCEMENT OF EARTHWORK OPERATIONS. EROSION CONTROL MEASURES SHALL INCLUDE, BUT ARE NOT LIMITED TO, ITEMS IDENTIFIED WITHIN THIS PLAN SET OR WITHIN THE VERMONT DEPARTMENT OF ENVIRONMENTAL CONSERVATION (VTDEC) BEST MANAGEMENT PRACTICES (BMP'S) FOR EROSION CONTROL. SEE EROSION AND SEDIMENTATION CONTROL PLAN AND EROSION SEDIMENTATION CONTROL NOTES & DETAIL SHEET.
6. THE CONTRACTOR SHALL CONSTRUCT AND MAINTAIN EROSION AND SEDIMENTATION CONTROL DEVICES THROUGHOUT THE PROJECT SITE FOR THE DURATION OF ALL CONSTRUCTION ACTIVITIES. THE CONTRACTOR SHALL (DAILY OR AS REQUIRED BASIS) INSPECT AND RECORD FINDINGS OF ALL EROSION AND SEDIMENTATION CONTROL DEVICES TO ENSURE THAT ALL ITEMS ARE IN STABLE CONDITION. IN THE EVENT THAT SAID ITEMS ARE DETERMINED TO BE IN UNSATISFACTORY CONDITION, THE CONTRACTOR SHALL RECORD THE UNSATISFACTORY ISSUE, THE DATE OF THE UNSATISFACTORY FINDING, THE APPROPRIATE CORRECTIVE MEASURE AND THE DATE THE CORRECTIVE MEASURE WAS COMPLETED.
7. ALL DISTURBED AREAS SHALL NOT BE LEFT BARE FOR MORE THAN 7 DAYS, SHALL BE STABILIZED IN A MANNER TO MITIGATE EROSION OR SEDIMENTATION FROM EXITING THE LIMIT OF WORK AND SHALL BE RESTORED IN-KIND UPON COMPLETION OF THE PROJECT. THE MAXIMUM AREA ALLOWED TO BE DISTURBED AND LEFT UNSTABILIZED IS ONE ACRE PER DRAINAGE AREA.
8. ALL SLOPES GREATER THAN 1V:3H SHALL BE PROTECTED FROM EROSION WITH EROSION CONTROL BLANKETS OR OTHER APPROPRIATE SLOPE STABILIZATION CONTROL MEASURES PRIOR TO LOAMING, SEEDING AND MULCHING WITHIN 72 HOURS OF COMPLETION. CONTRACTOR SHALL MAINTAIN EROSION CONTROL PROTECTION UNTIL VEGETATION GROWTH HAS BEEN ESTABLISHED. ALL SLOPE STABILIZATION CONTROL MEASURES SHALL BE INSTALLED IN ACCORDANCE WITH MANUFACTURER'S RECOMMENDATION AND VERMONT BEST MANAGEMENT PRACTICES.
9. ALL SWALES AND DITCHES WITH SLOPES EXCEEDING 5% SLOPE SHALL BE PROTECTED FROM EROSION WITH MATTING. ALL MATTING SHALL BE INSTALLED IN ACCORDANCE WITH MANUFACTURER'S RECOMMENDATION. ALL SWALES AND DITCHES SHALL BE PROPERLY STABILIZED PRIOR TO DIRECTING FLOW TO THEM.
10. THE CONTRACTOR SHALL NOT PLACE PERMANENT PLANTING AND SEEDING PRIOR TO MAY 1st AND AFTER SEPTEMBER 1st. TEMPORARY SEEDING SUCH AS WINTER RYE MAY BE USED OUTSIDE OF THIS PERIOD.
11. ALL WORK MUST BE DONE IN A MANNER WHICH MINIMIZES THE POTENTIAL FOR THE DISCHARGE OF SEDIMENT-LADEN WATER. CONTRACTOR IS RESPONSIBLE FOR DIVERTING, PUMPING, OR OTHERWISE CONTROLLING WATER AS NECESSARY.
12. ANY EPSC MEASURES NOT SHOWN IN THIS PLAN SET SHALL BE PERFORMED IN ACCORDANCE WITH THE VERMONT DEC LOW RISK SITE HANDBOOK FOR EROSION PREVENTION & SEDIMENT CONTROL.
13. GENERAL SITE INSPECTIONS SHALL BE CONDUCTED IN ACCORDANCE WITH SUBPART 2.2.1 OF THE GENERAL PERMIT FOR ALL AREAS THAT HAVE BEEN DISTURBED AND ARE NOT YET FINALLY STABILIZED AT LEAST ONCE EVERY SEVEN (7) CALENDAR DAYS, IMMEDIATELY BEFORE ANY STORMWATER RUNOFF PRODUCING EVENT, AND DAILY DURING THE WINTER CONSTRUCTION PERIOD (OCTOBER 15 THROUGH APRIL 15). UPON INSPECTION, ANY EROSION PREVENTION AND SEDIMENT CONTROL MEASURE THAT IS NOT INSTALLED PROPERLY, IN NEED OF MAINTENANCE, OR NOT EFFECTIVELY PREVENTING SEDIMENT LADEN DISCHARGES SHALL BE CORRECTED BEFORE THE NEXT RUNOFF PRODUCING EVENT. IN ADDITION:
    - IN ACCORDANCE WITH SUBPART 2.2.3 OR THE GENERAL PERMIT, IF DEWATERING ACTIVITIES ARE OCCURRING, THE PERMITTEE SHALL DAILY DURING DEWATERING ACTIVITIES INSPECT THE DEWATERING DEVICE TO ENSURE PROPER SEDIMENT CONTROL AND THE PERMITTEE SHALL COMPLETE DAILY SAMPLING REQUIREMENTS, USING A TURBIDITY METER, AT ALL POINTS WHERE DEWATERING WATER IS DISCHARGED.
    - IF VISIBLY DISCOLORED STORMWATER RUNS OFF THE CONSTRUCTION SITE OR DISCHARGES TO WATERS OF THE STATE, THE PERMITTEE SHALL TAKE IMMEDIATE CORRECTIVE ACTION TO INSPECT AND MAINTAIN EXISTING BEST MANAGEMENT PRACTICES (BMPS), AND TO INSTALL SUPPLEMENTAL BMPS NECESSARY TO MINIMIZE AND PREVENT THE DISCHARGE.
    - AFTER COMPLETION OF THE CORRECTIVE ACTION, IF THERE CONTINUES TO BE A DISCHARGE OF DISCOLORED STORMWATER FROM THE CONSTRUCTION SITE TO WATERS OF THE STATE, THE PERMITTEE SHALL NOTIFY DEC BY SUBMITTING A DISCHARGE REPORT IN ACCORDANCE WITH SUBPART 2.2.2 OF THE CGP WITHIN 24 HOURS OF DISCOVERING THE DISCHARGE.
14. THE PERMITTEE IS REQUIRED TO CONTINUE PERFORMING ALL GENERAL AND DISCHARGE INSPECTIONS UNTIL COVERAGE UNDER THIS PERMIT IS TERMINATED IN ACCORDANCE WITH SUBPART 5.5 OR EXPIRED.

CONSTRUCTION IN WETLAND/BUFFERS:

WHERE EARTHWORK IS CONDUCTED WITHIN WETLAND BUFFERS:

1. ENGINEER SHALL REVIEW SITE WORK PLAN WITH CONTRACTOR TO IDENTIFY LIMITATIONS FOR EQUIPMENT USE AND DISTURBANCE.
2. DELINEATE WETLAND BOUNDARIES IN THE PROPOSED WORK AREA AND MARK CONSTRUCTION LIMITS WITH SNOW FENCING.
3. PLACE APPROPRIATE EROSION CONTROL BARRIER (SILT FENCE OR APPROVED PERIMETER CONTROL) BETWEEN WORK AREA.
4. RESTORE DISTURBED AREAS TO PREVIOUS ELEVATION WITH INDIGENOUS MATERIAL AND RAKE SMOOTH. EXCESS MATERIAL SHALL BE REMOVED TO A NON-WETLAND AREA FOR DISPOSAL.
5. INSPECT RESTORED AREAS TO CONFIRM STABILITY, REPAIR AS REQUIRED.

WORK IN VTRANS RIGHT-OF-WAY

1. CONTRACTOR SHALL PREPARE AND SUBMIT A PROPOSED TRAFFIC CONTROL PLAN THAT COMPLIES WITH ALL APPLICABLE VTRANS AND MUTCD STANDARDS. CONTRACTOR SHALL OBTAIN VTRANS APPROVAL OF TRAFFIC CONTROL PLAN.
2. CONTRACTOR SHALL REVIEW THE VTRANS TMP CHECKLIST FOR STRATEGIES AND ITEMS NECESSARY FOR A SUCCESSFUL TEMPORARY TRAFFIC CONTROL PLAN FOR THIS PROJECT.
3. CONTRACTOR SHALL APPLY FOR AND OBTAIN A VTRANS 111 PERMIT FOR ALL WORK IN VTRANS RIGHT-OF-WAYS
4. CONTRACTOR IS RESPONSIBLE FOR ALL TRAFFIC CONTROL AND RELATED COSTS
5. CONTRACTOR SHALL COORDINATE PROJECT SCHEDULE, CONSTRUCTION SIGN OVERLAP, AND MATERIAL DELIVERIES WITH THE FOLLOWING PROJECT(S): WAITSFIELD-MORETOWN STP CULV(165)
   PROJECT DESCRIPTION: CULVERT REPLACEMENT ON VT 100 FROM WAITSFIELD MM 2.444 TO MORETOWN MM 1.227. CONSTRUCTION PROPOSED FOR 2027.

WORK IN TOWN RIGHT-OF-WAY

1. CONTRACTOR SHALL PREPARE AND SUBMIT A PROPOSED TRAFFIC CONTROL PLAN THAT COMPLIES WITH ALL APPLICABLE VTRANS AND MUTCD STANDARDS. CONTRACTOR SHALL OBTAIN TOWN APPROVAL OF TRAFFIC CONTROL PLAN.
2. CONTRACTOR SHALL APPLY FOR AND OBTAIN A VTRANS 111 PERMIT FOR ALL WORK IN RIGHT-OF-WAYS.
3. CONTRACTOR IS RESPONSIBLE FOR ALL TRAFFIC CONTROL AND RELATED COSTS

PEDESTRIAN TRAFFIC CONTROL NOTES

1. PER THE VTRANS BICYCLE CORRIDOR PRIORITY MAP, VT 100 IN WAITSFIELD IS CONSIDERED A HIGH USE/PRIORITY ROUTE.

   ALL REASONABLE EFFORTS SHALL BE MADE TO ACCOMMODATE PEDESTRIAN AND BICYCLE TRAVEL. TRAFFIC CONTROL PLANS SHOULD REPLICATE THE EXISTING PEDESTRIAN PATHWAY AS NEARLY AS PRACTICAL. THIS CAN INCLUDE BUT IS NOT LIMITED TO A DEDICATED PEDESTRIAN ESCORT (NOT A FLAGGER ON DUTY), SIGNAGE, AND PEDESTRIAN CHANNELING DEVICE WALKWAYS THAT MEET ADA REQUIREMENTS OR HAVE BICYCLISTS FOLLOW THE RULES OF THE ROAD JUST LIKE A MOTORIST. ALSO, OBSTACLES, EQUIPMENT, CONSTRUCTION MATERIALS, TRAFFIC CONTROL DEVICES, ETC. SHOULD NOT ENCROACH INTO THE BICYCLE PATH OF TRAVEL AND THESE ROUTES ARE FREE OF RUTT, SAND, AND MUD TO PREVENT BICYCLIST CRASHES.

   COMMUNICATIONS WITH BICYCLE EVENT COORDINATORS AND EVENT PLANNERS SHOULD BE CONSIDERED DUE TO THE HIGH USE OF BICYCLES WITHIN THE PROJECT AREAS.

   ROUTE 200 ON 100 – RIDE ROUTE 100/200 – 200 MILES IN ONE DAY, THIS IS A ONE-DAY BICYCLE RIDE THAT STRETCHES THROUGH THE PROJECT AREA.

   IF LANES ARE NARROWED TO 10 FT IT IS RECOMMENDED THAT FLAGGER PERSONNEL HOLD RIDERS TO THE END OF THE QUEUE, SO THEY ARE NOT COMPETING FOR LANE SPACE TO ENSURE THEIR SAFETY.

   THE CONTRACTOR SHALL REVIEW AND USE "THE BICYCLE AND PEDESTRIAN WORK ZONE TRAFFIC CONTROL GUIDE," AVAILABLE ON THE VTRANS WEBSITE, TO INCORPORATE THE APPLICABLE BICYCLE AND PEDESTRIAN TRAFFIC CONTROL INTO THEIR SITE-SPECIFIC TRAFFIC CONTROL PLAN FOR ALL STAGES OF CONSTRUCTION.

BID SET
NOT FOR CONSTRUCTION 7/16/2026

DuBois & King inc.
www.dubois-king.com
© Copyright 2026 DuBois & King inc.

STATE OF VERMONT
JOHN BRIAN ASHE
No. 9000
PROFESSIONAL ENGINEER
07-16-2026
BID SET
NOT FOR CONSTRUCTION

REVISIONS			
NUMBER	DATE	REVISION DESCRIPTION	BY

CLIENT NAME
TOWN OF WAITSFIELD

PROJECT NAME
WAITSFIELD COMMUNITY WASTEWATER SYSTEM

PROJECT ADDRESS
4144 MAIN STREET
WAITSFIELD, VERMONT 05673

SHEET TITLE
CONTRACT NO. 2
GENERAL NOTES

D&K PROJECT #	PROJ. ENG.
227947	JBA
DRAWN BY	CHECKED BY
EBS	DDC

DATE
JULY 2026

SHEET NUMBER
G4

I:\2\227947 Waitsfield Water and Wastewater Feasibility Stud\Drawings\Civil\227947-GN-002.DWG 8/27/2026 10:19 AM

1.01 TO BE TESTED:

ALL PRESSURE PIPES, NON-PRESSURE PIPES, SANITARY MANHOLES, WET WELLS, PUMPSTATION TANKS, AND APPURTENANCES SHALL BE TESTED.

1.02 QUALITY ASSURANCE:

PRIOR TO FINAL ACCEPTANCE OF THE WORK, ALL PRESSURE PIPES, NON-PRESSURE PIPES, SANITARY MANHOLES, PUMP STATION WETWELLS, SEPTIC TANKS, AND APPURTENANCES SHALL MEET SPECIFIC LEAKAGE REQUIREMENTS. THESE LEAKAGE REQUIREMENTS MUST BE SATISFIED BY THE BASIC MATERIALS ALONE. WHERE JOINT FILLERS AND THE LIKE HAVE BEEN SPECIFIED, PRIMARILY TO PROTECT JOINTING MATERIALS, AND SECONDARILY TO PROVIDE A FACTOR OF SAFETY, THEY SHALL NOT BE APPLIED UNTIL AFTER LEAKAGE TESTS HAVE BEEN COMPLETED AND HAVE BEEN ACCEPTED BY ENGINEER.

EVERY TEST MUST BE WITNESSED BY ENGINEER AND ANY TEST NOT SO WITNESSED WILL BE CONSIDERED AS NOT HAVING BEEN PERFORMED. CONTRACTOR SHALL PRETEST THE WORK AND SHALL NOT REQUEST ENGINEER TO WITNESS THE FINAL TEST UNTIL HE IS REASONABLY CERTAIN THAT THE TEST WILL YIELD RESULTS WITHIN THE ACCEPTABLE LIMITS.

THESE TESTING REQUIREMENTS DO NOT APPLY TO EXISTING STRUCTURES OR PIPING.

1.03 SEQUENCING AND SCHEDULING:

NOTIFY ENGINEER AT LEAST 48 HOURS IN ADVANCE OF A SCHEDULED TEST SO THAT THE TEST MAY BE WITNESSED.

1.04 SUBMITALS

CERTIFIED TEST RESULTS ON FORMS APPROVED BY ENGINEER.

2.01 TESTING APPARATUS:

A. PROVIDE ALL LABOR, PUMPS, PLUGS, MEASURING EQUIPMENT AND OTHER APPARATUS, COMPLETE, AND AS REQUIRED TO PERFORM ALL TESTING.
B. PROVIDE CLEAN WATER, AIR, NITROGEN AND OTHER MATERIALS AS REQUIRED TO ACCOMPLISH ALL TESTING.
C. PROVIDE PLUGS AND CAPS CAPABLE OF WITHSTANDING THE TEST PRESSURES.
D. PROVIDE ALL TEMPORARY FLANGES, PLUGS, BULKHEADS, THRUSTBLOCKS, WEIGHTING, BRACING AND OTHER ITEMS NECESSARY TO PREVENT JOINTS FROM SEPARATING, AND TO PREVENT ANY INJURIES OR DAMAGE.
E. MONITORING AIR PRESSURE GAUGE SHALL HAVE A RANGE OF 0-10 PSI, DIVISIONS OF 0.10 PSI, AND ACCURACY OF 0.05 PSI+.

3.01 PREPARATION:

A. MANHOLE INSPECTIONS – GIVEN AMPLE NOTICE, ENGINEER WILL CONDUCT HIS INSPECTION OF MANHOLES PRIOR TO THE PERFORMANCE OF LEAKAGE TESTS. IF THE INSPECTIONS ARE NOT COMPLETED BEFORE LEAKAGE TESTING, AND SUBSEQUENT MODIFICATIONS ARE MADE TO A MANHOLE, THE MANHOLE SHALL BE RETESTED FOR LEAKAGE.
B. BRACING PRESSURE PIPING – PLUG OPEN ENDS, ADEQUATELY BLOCK BENDS, TEES, ENDS, AND OTHER FITTINGS, AND DO WHATEVER IS NECESSARY TO BRACE THE PIPING SYSTEM SO THAT IT WILL SAFELY WITHSTAND THE PRESSURES DEVELOPED UNDER THE TESTS AND SO THAT NO DAMAGE OR INJURY WILL OCCUR TO THE PIPELINE, PEOPLE OR PROPERTY.
C. PROTECTION – BEFORE TESTS ARE CONDUCTED, ISOLATE OR REMOVE ANY REGULATOR, GAUGE, TRAP, OR OTHER APPARATUS OR EQUIPMENT WHICH MAY BE DAMAGED BY TEST PRESSURES.
D. FLUSHING – FLUSH ALL PIPING SYSTEMS, EXCEPT AIR PIPING, WITH WATER PRIOR TO TESTING.

3.02 GENERAL:

A. TRAPPED AIR – TRAPPED AIR MAY CAUSE A FALSE INDICATION OF THE RATE OF LEAKAGE DURING EXFILTRATION TESTING. POINTS OF CONCERN INCLUDE ENDS OF LINES, STUBS, HOUSE CONNECTIONS AND HIGH POINTS IN PIPE LINES. NO CREDIT WILL BE MADE FOR THIS CONDITION AND NO ADJUSTMENT WILL BE MADE TO THE ALLOWABLE LEAKAGE. WHERE TRAPPED AIR IS SUSPECTED OF CAUSING A TEST FAILURE, DO WHATEVER IS NECESSARY TO EVACUATE THE AIR AND REPEAT THE TESTS UNTIL THE ACTUAL LEAKAGE IS EQUAL TO OR LESS THAN THE ALLOWABLE RATE OF LEAKAGE.
B. WATER ABSORPTION – NO CREDIT WILL BE GIVEN FOR ABSORPTION OF WATER IN PIPE AND MANHOLE WALLS. IF NECESSARY, FILL PIPES AND MANHOLES WITH WATER WELL IN ADVANCE OF EXFILTRATION TESTING AND ALLOW THEM TO SOAK IN ORDER TO ELIMINATE OR MINIMIZE THE EFFECTS OF ABSORPTION.

3.03 TESTS FOR NON-PRESSURE PIPING (EXCEPT STORM DRAINS)

A. GENERAL
1. LEAKAGE SHALL BE DETERMINED BY AIR TESTING OR EXFILTRATION TESTING. ENGINEER RESERVES THE RIGHT TO REQUIRE INFILTRATION TESTING.
2. LEAKAGE TESTING SHALL INCLUDE THE MAIN NON-PRESSURE PIPE, NEW HOUSE CONNECTIONS, AND ALL OTHER APPURTENANCES ON THE SECTION OF PIPELINE BEING TESTED.
3. GENERALLY LIMIT PIPELINE TEST SECTIONS TO RUNS BETWEEN ADJACENT STRUCTURES. MANHOLES MAY BE TESTED SIMULTANEOUSLY WITH PIPES WHEN USING EXFILTRATION TESTING.
4. ADEQUATELY PLUG ENDS OF ALL HOUSE CONNECTIONS, STUBS AND ALL OTHER OPENINGS FROM WHICH AIR OR WATER MAY ESCAPE.
5. USE CLEAN WATER FOR EXFILTRATION TESTS.
6. ALL PIPE TRENCH SHALL BE BACKFILLED PRIOR TO PERFORMING TESTING PROCEDURES.

B. EXFILTRATION TEST ON PIPES ONLY
1. THE MINIMUM WATER LEVEL REQUIRED FOR TESTING IS THE HIGHER OF EITHER 4' ABOVE THE CROWN OF THE UPSTREAM (HIGHEST) END OF THE PIPE BEING TESTED OR 4' ABOVE THE MAXIMUM GROUNDWATER LEVEL ALONG THE TEST SECTION. WHERE SUCH A WATER LEVEL WILL BE MORE THAN 25 FEET ABOVE THE LOWEST POINT IN THE SECTION BEING TESTED, THE ENGINEER WILL PRESCRIBE TEST MODIFICATIONS OR REQUIRE THAT OTHER METHODS OF TESTING BE UTILIZED.
2. INSTALL A WATERTIGHT PLUG IN THE DOWNSTREAM END AND A WATERTIGHT PLUG IN THE UPSTREAM END FITTED WITH A 2" DIAMETER, CLEAR RIGID TUBE INSTALLED IN A VERTICAL POSITION TO FACILITATE OBSERVATION OF WATER LEVELS. TUBE SHALL BE LONG ENOUGH TO OBTAIN THE REQUIRED HEAD AND MADE OF EXTRUDED LUCITE ACRYLIC, POLYCARBONATE (LEXAN), TENITE BUTYRATE OR OTHER PLASTIC MATERIAL. GLASS IS UNACCEPTABLE.
3. FILL PIPE WITH WATER AND LET STAND FOR AT LEAST FOUR (4) HOURS AND CONDUCT TEST. ADJUST WATER TO REFERENCE MARK, THEN CONTINUALLY ADD WATER FROM A GRADUATED CONTAINER TO KEEP WATER IN TUBE AT A CONSTANT LEVEL FOR 60 MINUTES.
4. UPON SATISFACTORILY COMPLETING THE TEST, REMOVE THE DOWNSTREAM PLUG IN THE PRESENCE OF ENGINEER. DO NOT TOUCH NOR REMOVE THE UPSTREAM PLUG UNTIL APPROVED BY ENGINEER.
5. ALLOWABLE EXFILTRATION IS 100 GALLONS/DAY/INCH DIAMETER/MILE OF PIPE.

C. EXFILTRATION TESTING OF PIPELINES AND MANHOLES
1. LOWER GROUNDWATER TABLE TO BELOW THE BOTTOM OF THE MANHOLE. INSTALL A WATERTIGHT PLUG IN THE PIPE AT A DOWNSTREAM MANHOLE AND ANOTHER WATERTIGHT PLUG(S) IN THE INCOMING PIPE(S) IN THE UPSTREAM MANHOLE. FILL UPSTREAM MANHOLE UNTIL WATER REACHES ITS HIGHEST POINT WITHOUT OVERFLOWING.
2. MORE THAN ONE MANHOLE MAY BE INCLUDED IN A TEST SECTION, PROVIDED THAT WHEN THE LOWEST MANHOLE IS FILLED, THE WATER LEVEL IN THE OTHER MANHOLES IS AT LEAST 2' ABOVE THE HIGHEST MANHOLE JOINT, AND THE PIPE IS SUBJECTED TO AT LEAST A 4' DIFFERENTIAL HYDROSTATIC PRESSURE.
3. ALLOW AT LEAST 4 HOURS FOR STABILIZATION. CONDUCT THE TEST FOR A MINIMUM OF 6 HOURS. ALLOWABLE EXFILTRATION IS THE ALLOWABLE PIPE EXFILTRATION AS SPECIFIED IN SUBSECTION 3.03.B.5 PLUS THE ALLOWABLE MANHOLE EXFILTRATION AS SPECIFIED IN SUBSECTION 3.05 E.

D. INFILTRATION TEST
1. THE MINIMUM HEAD OF GROUNDWATER REQUIRED FOR INFILTRATION TESTING IS 4' ABOVE THE CROWN OF THE PIPE AT THE UPSTREAM END.
2. INFILTRATION MAY BE MEASURED WITH AN APPROVED GRADUATED CONTAINER CAPABLE OF INTERCEPTING ALL INFLOW, BY A PIPELINE V-NOTCH WEIR, OR BY OTHER APPROVED METHODS. WHEN USING INSTREAM TYPE MEASURING DEVICES, DO NOT MEASURE FLOWS UNTIL STEADY STATE CONDITIONS ARE ESTABLISHED.
3. ALLOWABLE INFILTRATION IS SAME AS ALLOWABLE EXFILTRATIONS TEST AS SPECIFIED IN SUBSECTION 3.03 B.5.
4. WHERE GROUNDWATER LEVEL IS AT LEAST 2' ABOVE THE HIGHEST MANHOLE JOINT, MANHOLES MAY BE INCLUDED IN THE TEST. NO VISIBLE LEAKAGE WILL BE PERMITTED IN MANHOLES.

E. AIR TESTING-PIPES ONLY
1. INSTALL TAPPED PLUG AT AIR INLET AND AIRTIGHT PLUGS AT OTHER ENDS OF TEST SECTION.
2. CONNECT AIR SUPPLY EQUIPMENT TO TAPPED PLUG AND FILL SLOWLY UNTIL A CONSTANT PRESSURE OF 3.5 PSIG IS MAINTAINED.
3. MAINTAIN PRESSURE ABOVE 3.0 PSIG FOR AT LEAST 5 MINUTES FOR STABILIZATION OF THE TEMPERATURE. CHECK PLUGS FOR LEAKS.
4. ADJUST PRESSURE TO 3.5 PSIG AND DISCONNECT AIR SUPPLY.
5. BEGIN TIMING PRESSURE DROP AT 3.0 PSIG AND RECORD TIME INTERVAL FOR THE PRESSURE TO DROP TO 2.5 PSIG.
6. INCREASE ABOVE PRESSURES 0.5 PSIG FOR EACH FOOT GROUNDWATER IS ABOVE THE LOWEST INVERT OF THE PIPE.
7. MINIMUM TIME FOR PRESSURE DROP OF 0.5 PSIG SHALL BE 75 SECONDS PER INCH DIAMETER.
8. CONTRACTOR MAY CONDUCT WATER TEST IF AIR TEST FAILS.

3.04 TESTS FOR PRESSURE PIPES

B. GENERAL
1. LEAKAGE TESTING SHALL INCLUDE THE MAIN PRESSURE PIPE, SERVICE CONNECTIONS, AND ALL OTHER APPURTENANCES ON THE SECTION OF PIPELINE BEING TESTED.
2. ALL PIPES SHALL BE TESTED PRIOR TO APPLYING INSULATION AND BEFORE THEY ARE CONCEALED OR FURRED-IN.
3. PROVIDE ALL NECESSARY GAUGES. GAUGES SHALL BE STANDARD PRESSURE TYPE WITH A MINIMUM 6" DIAMETER DIAL AND A PRESSURE RANGE NOT IN EXCESS OF 150% OF THE MAXIMUM REQUIRED TEST PRESSURE.
4. PROVIDE AND MAINTAIN AT THE SITE A GAUGE STAND WITH AN APPROVED LABORATORY CALIBRATED TEST GAUGE. PERIODICALLY CHECK TEST GAUGES USED FOR TESTING AGAINST THE TEST GAUGE, AND WHENEVER REQUESTED BY ENGINEER.
5. WHERE IT IS ABSOLUTELY NECESSARY FOR TESTING, TAP PIPES AND INSERT APPROVED PLUGS AFTER TESTING IS COMPLETED. INSTALL AIR RELEASE VALVES AT HIGH POINTS FOR WATER TESTING IF HYDRANTS OR BLOWOFFS ARE NOT AVAILABLE.
6. PROVIDE A HAND OR MOTOR DRIVEN PUMP TO MAINTAIN THE REQUIRED TEST PRESSURE CONSTANT THROUGHOUT THE DURATION OF THE TEST. IF A WATER PUMP IS USED, INSTALL WATER METER ON SUPPLY SIDE OF PUMP. IF AN AIR OR INERT GAS PUMP IS USED, LEAKAGE SHALL BE DETERMINED AND CALCULATED BY THE CYCLING OF THE PUMP.
7. ALL CONCRETE THRUST BLOCKS AND RESTRAINTS SHALL BE IN PLACE AND CURED AT LEAST 7 DAYS.
8. ALL BURIED PIPE SHALL BE BACKFILLED.
9. ALL WATER MAIN TESTING SHALL BE IN ACCORDANCE WITH THE REQUIREMENTS OF AWWA STANDARD C600.

B. NONGASEOUS PIPE HYDROSTATIC TEST
1. OPEN ALL AIR RELEASE VALVES AND FILL PIPE WITH WATER AT A RATE NOT TO EXCEED VENTING CAPACITY OF THE VALVES.
2. RAISE PRESSURE TO 150 PERCENT OF THE HIGHEST WORKING PRESSURE, OR 100 PSIG, WHICHEVER IS GREATER, ADJUSTED TO LOWEST POINT OF THE TEST SECTION. MAINTAIN A MINIMUM OF 125 PERCENT OF THE WORKING PRESSURE AT THE HIGHEST POINT OF THE TEST SECTION. IN SOME INSTANCES THE LENGTHS OF TEST SECTIONS WILL HAVE TO BE SHORTENED TO MEET THE ABOVE REQUIREMENTS.
3. MAINTAIN PRESSURE FOR A MINIMUM OF TWO (2) HOURS.
4. PERFORM LEAKAGE TEST.

C. NONGASEOUS PIPE LEAKAGE TEST
1. PERFORM SIMULTANEOUSLY WITH HYDROSTATIC TEST.
2. MAINTAIN PRESSURE WITHIN A MAXIMUM VARIATION OF ± 5 PSI FOR 2 HOURS MINIMUM.
3. RECORD AMOUNT OF LEAKAGE FROM WATER METER.
4. ALLOWABLE LEAKAGE IS:
   a. EXPOSED PIPING: EXPOSED PIPING WITH FLANGED, THREADED OR WELDED JOINTS, OR BURIED PIPE IN CONFLICT WITH POTABLE WATER LINES: NO LEAKAGE ALLOWED.
   b. OTHER PIPE BY THE FORMULA:

$$L = \frac{[(S)(D)(SQRT(P))]}{148{,}000}$$

L = MAXIMUM ALLOWABLE LEAKAGE IN GALLONS PER HOUR.
S = LENGTH OF PIPE TESTED, IN FEET.
D = NOMINAL INTERNAL DIAMETER OF THE PIPE IN INCHES
P = AVERAGE TEST PRESSURE IN POUNDS PER SQUARE INCH GAGE.

3.05 WATER TESTS FOR SANITARY MANHOLES

A. MANHOLES MAY BE WATER TESTED SIMULTANEOUSLY WITH NON-PRESSURE PIPES. IF THE ALLOWABLE LEAKAGE IS EXCEEDED, SEPARATELY TEST EACH MANHOLE AND EACH RUN OF PIPE IN THE FAILED SECTION.
B. MANHOLES MAY BE TESTED PRIOR TO OR AFTER BACKFILLING BY FILLING THEM WITH CLEAN WATER TO THE TOP. CONDUCT TEST FOR 6 HOURS.
D. ENGINEER RESERVES TEST MANHOLES AND WET WELLS PRIOR TO FILLING INTERIOR JOINTS AND PRIOR TO CONSTRUCTING THE MANHOLE INVERTS AND BENCHES, BUT AFTER ALL PIPE CONNECTIONS TO THE MANHOLES HAVE BEEN MADE.
E. ALLOWABLE EXFILTRATION LEAKAGE IS ONE GALLON/ DAY/VERTICAL FOOT.

3.06 VACUUM TESTS FOR SANITARY MANHOLES

A. MANHOLES MAY BE VACUUM TESTED IN LIEU OF THE PREVIOUSLY DESCRIBED WATER TEST. THE VACUUM TESTS MUST BE ACCOMPLISHED PRIOR TO BACK-FILLING THE MANHOLE, FILLING JOINTS, AND CONSTRUCTING THE MANHOLE INVERTS AND BENCHES. ALL PIPE CONNECTIONS SHALL BE MADE PRIOR TO THE TEST.

B. TEST PROCEDURE
1. PLUG PIPE OPENINGS AND SECURELY BRACE THE PLUGS AND PIPE.
2. SET THE TESTER ONTO THE TOP SECTION OF THE MANHOLE AND INFLATE THE COMPRESSION BAND TO EFFECT A SEAL BETWEEN THE STRUCTURE AND THE VACUUM BASE.
3. CONNECT THE VACUUM PUMP TO THE OUTLET PORT, OPEN THE VALVE, START THE MOTOR AND DRAW A VACUUM OF 10" HG (MERCURY).
4. CLOSE THE VALVE AND MONITOR THE VACUUM GAUGE.
5. THE TEST SHALL PASS IF THE VACUUM HOLDS AT 10" HG OR DROPS NO LOWER THAN 9" HG WITHIN THE FOLLOWING TIMES:

DEPTH OF MANHOLE	TIME
0' – 10'	25 SEC.
10' – 15'	40 SEC.
15' – 20'	55 SEC.
20' – 25'	70 SEC.

6. IF THE VACUUM DROPS IN EXCESS OF THE PRESCRIBED RATE, THE CONTRACTOR SHALL LOCATE THE LEAK, MAKE PROPER REPAIRS, AND RETEST THE MANHOLE.
7. IF THE UNIT FAILS THE TEST AFTER REPAIR, THE UNIT SHALL BE WATER EXFILTRATION TESTED.

C. THE ENGINEER RESERVES THE RIGHT TO REQUIRE AN INFILTRATION TEST IF HE IS NOT SATISFIED WITH EXFILTRATION TEST.

3.07 ALLOWABLE LEAKAGE

A. IT IS THE INTENT OF THIS CONTRACT TO SECURE PIPING SYSTEMS WITH LEAKAGE, IN EACH SECTION OF PIPE AND WITHIN EACH STRUCTURE, EQUAL TO, OR LESS THAN THAT SPECIFIED. IT IS ALSO THE INTENT TO SECURE A PIPING SYSTEM FREE FROM VISIBLE DRIPS, STREAMS, AND LEAKS. THEREFORE, EVEN IF A PORTION OF THE SYSTEM MEETS THE REQUIREMENTS FOR ALLOWABLE LEAKAGE, VISIBLE LEAKS ARE NOT PERMITTED AND SHALL BE STOPPED.
B. LEAKAGE TESTS WILL BE CONSIDERED SATISFACTORILY PASSED WHEN THE RATE OF LEAKAGE IS EQUAL TO OR LESS THAN THE STIPULATED ALLOWANCES, THERE IS NO EVIDENCE OF VISIBLE LEAKS, AND THERE IS NO EVIDENCE OF OTHER SYSTEM DEFECTS.

3.08 RETESTING

A. PIPES AND MANHOLES NOT PASSING THE TESTS SHALL HAVE ALL DEFECTS CORRECTED TO THE SATISFACTION OF ENGINEER, AND SHALL BE RETESTED AND RECORRECTED AS OFTEN AS IS NECESSARY UNTIL THE TEST REQUIREMENTS HAVE BEEN MET.
B. IT IS THE INTENT OF THIS CONTRACT TO OBTAIN WORK MEETING TEST REQUIREMENTS ON THEIR OWN AND SOLELY THROUGH THE USE OF THE NORMAL INTEGRAL SEALING COMPONENTS. JOINT LEAKS SHALL NOT BE STOPPED THROUGH THE USE OF CONCRETE, CAULKING, MORTAR, OR OTHER PATCHING MATERIALS. LEAKING PIPE JOINTS SHALL BE REJOINED AND LEAKING MANHOLE JOINTS SHALL HAVE JOINTS RESET, OR REPLACED IF NECESSARY.
C. METHODS OTHER THAN REJOINING, RESETTING OR REPLACING JOINT SEALS SHALL REQUIRE THE WRITTEN APPROVAL OF ENGINEER.

3.09 LEAKAGE TESTING STRUCTURES (PUMP STATIONS AND SEPTIC TANKS)

EXFILTRATION TESTS – LEAKAGE SHALL BE DETERMINED BY EXFILTRATION TESTING. ENGINEER RESERVES THE RIGHT TO REQUIRE INFILTRATION TESTING.
1. DETERMINE GROUNDWATER LEVELS BY INSTALLING TEST HOLES, TEST PITS, OR PERFORATED OBSERVATION WELLS FITTED WITH SCREENS AT THE BOTTOM.
2. FILL STRUCTURES TO BE TESTED TO 12 INCHES ABOVE THEIR MAXIMUM OPERATING LEVELS, EXCEPT WHERE WEIRS CONTROL THE DEPTH, AND THEN TO THE MAXIMUM WEIR SETTING.
3. THE MINIMUM WATER LEVEL REQUIRED FOR TESTING IS 4 FEET ABOVE THE MAXIMUM GROUNDWATER LEVEL. WHERE THIS IS NOT POSSIBLE, ENGINEER WILL PRESCRIBE TEST MODIFICATIONS, REQUIRE INFILTRATION TESTING, OR REQUIRE THAT OTHER METHODS OF TESTING BE UTILIZED.
4. FOR POTABLE WATER FACILITIES, USE GOOD QUALITY, CLEAN WATER FOR TESTING. FOR SEWAGE, SLUDGE, OR OTHER WASTE FACILITIES, USE RELATIVELY CLEAN WATER, SUCH AS FROM SURFACE WATERS. IN SEWAGE LAGOONS, SEWAGE MAY BE USED PROVIDED THAT IT CAN BE PROPERLY DISPOSED OF AFTER EACH TEST.
5. UNLESS OTHERWISE APPROVED IN ADVANCE BY ENGINEER, EACH STRUCTURE OR TANK SHALL BE TESTED SEPARATELY.

3.10 ALLOWABLE LEAKAGE

A. THE MAXIMUM ALLOWABLE LEAKAGE FOR THE VARIOUS SYSTEMS IS CONTAINED ON THE FORM LEAKAGE TESTING REQUIREMENTS, ATTACHED TO THIS SECTION.
B. IT IS THE INTENT OF THIS CONTRACT TO SECURE SYSTEMS WITH LEAKAGE, IN EACH STRUCTURE, EQUAL TO, OR LESS THAN THAT SPECIFIED. IT IS ALSO THE INTENT TO SECURE A SYSTEM FREE FROM VISIBLE DRIPS, STREAMS, AND LEAKS. THEREFORE, EVEN

IF A PORTION OF THE SYSTEM MEETS THE REQUIREMENTS FOR ALLOWABLE LEAKAGE, VISIBLE LEAKS ARE NOT PERMITTED AND SHALL BE STOPPED.

C. LEAKAGE TESTS WILL BE CONSIDERED SATISFACTORILY PASSED WHEN THE RATE OF LEAKAGE IS EQUAL TO OR LESS THAN THE STIPULATED ALLOWANCES, THERE IS NO EVIDENCE OF VISIBLE LEAKS, AND THERE IS NO EVIDENCE OF OTHER SYSTEM DEFECTS.

3.11 REPAIRS/REPLACEMENTS/RETESTING

A. STRUCTURES NOT PASSING THE TESTS SHALL HAVE DEFECTS CORRECTED TO THE SATISFACTION OF ENGINEER, AND SHALL BE RETESTED AND RECORRECTED AS OFTEN AS IS NECESSARY UNTIL THE TEST REQUIREMENTS HAVE BEEN MET.
B. IT IS THE INTENT OF THIS CONTRACT TO OBTAIN WORK MEETING TEST REQUIREMENTS ON THEIR OWN AND SOLELY THROUGH THE USE OF THE NORMAL INTEGRAL SEALING COMPONENTS. HOWEVER, IN CERTAIN INSTANCES, ENGINEER MAY APPROVE THE USE OF EPOXY COATINGS, EPOXY INJECTIONS, OR OTHER LONG- TERM SOLUTIONS FOR ELIMINATING OR REDUCING LEAKAGE.
C. METHODS OTHER THAN REJOINING, RESETTING OR REPLACING JOINT SEALS SHALL REQUIRE THE WRITTEN APPROVAL OF ENGINEER.

4.01 TESTING OF PRESSURE DISTRIBUTION LATERALS

4.02 PREPARATION

A. PRIOR TO TESTING, THE CONTRACTOR SHALL FILL THE PUMP STATION TO THE "PUMP ON" LEVEL WITH CLEAN WATER.
B. ALL PIPING, PUMPS AND CONTROLS SHALL BE IN THEIR FINAL CONFIGURATION, EXCEPT THAT ORIFICE GUARDS MUST NOT HAVE BEEN INSTALLED.
C. BALL VALVES PROVIDED AT THE BEGINNING OF EACH LATERAL SHOULD ALREADY HAVE BEEN ADJUSTED TO PROVIDE EVEN DISTRIBUTION OF LIQUID THROUGHOUT THE DISPOSAL FIELD.

4.03 TESTING

A. AFTER ACTUATING THE PUMP, THE SQUIRT HEIGHT OF WATER FROM REPRESENTATIVE ORIFICES WILL BE MEASURED. THE TEST WILL BE CONSIDERED SUCCESSFUL IF:

1. THE SQUIRT HEIGHT FROM ANY ORIFICE, MEASURED FROM THE TOP SURFACE OF THE DISTRIBUTION LATERAL TO THE HIGHEST POINT REACHED BY THE WATER, IS NOT LESS THAN 2.3 FEET, AND

2. THE DIFFERENCE BETWEEN THE LOWEST SQUIRT HEIGHT AND HIGHEST SQUIRT HEIGHT IN EACH BED IS LESS THAN 10%.

BID SET
NOT FOR CONSTRUCTION 7/16/2026

I:\2\227947 Waitsfield Water and Wastewater Feasibility Stud\Drawings\Civil\227947-GN-002.DWG 8/27/2026 10:19 AM

DuBois & King inc.
www.dubois-king.com
© Copyright 2026 DuBois & King inc.

STATE OF VERMONT
JAMES BRIAN ASHE
NO. 9000
PROFESSIONAL ENGINEER
07-16-2026
BID SET
NOT FOR CONSTRUCTION

REVISIONS			
NUMBER	DATE	REVISION DESCRIPTION	BY

CLIENT NAME
TOWN OF WAITSFIELD

PROJECT NAME
WAITSFIELD COMMUNITY WASTEWATER SYSTEM

PROJECT ADDRESS
4144 MAIN STREET
WAITSFIELD, VERMONT 05673

SHEET TITLE
CONTRACT NO. 2
PRESSURE AND LEAKAGE TESTING NOTES

D&K PROJECT #	PROJ. ENG.
227947	JBA
DRAWN BY	CHECKED BY
EBS	DDC

DATE
JULY 2026

SHEET NUMBER
G5

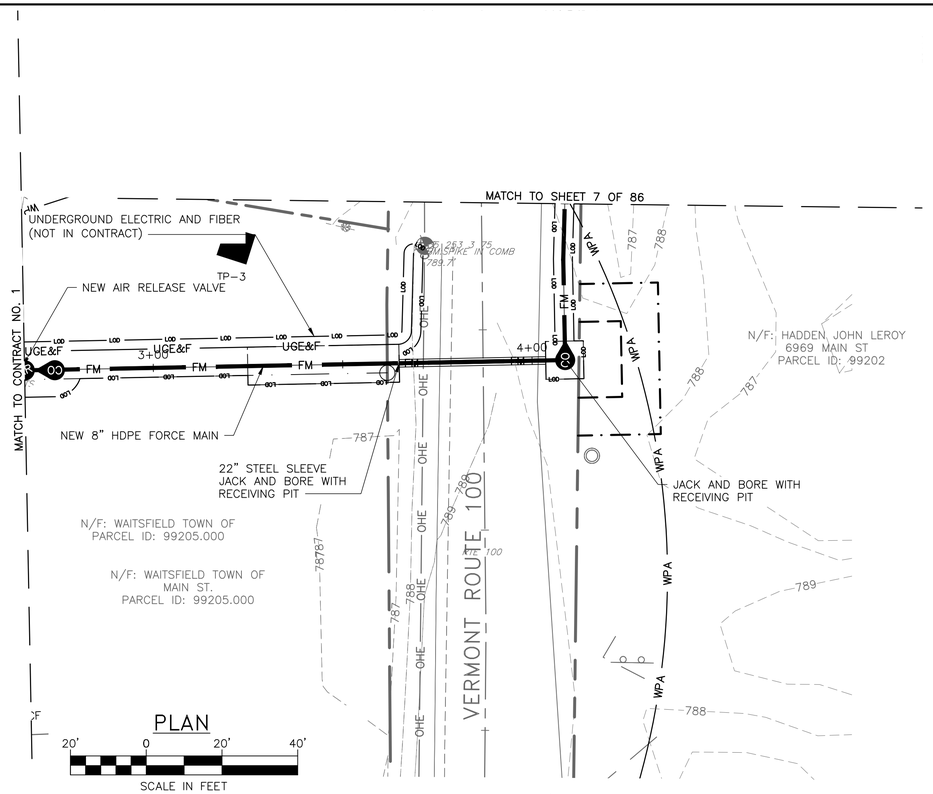

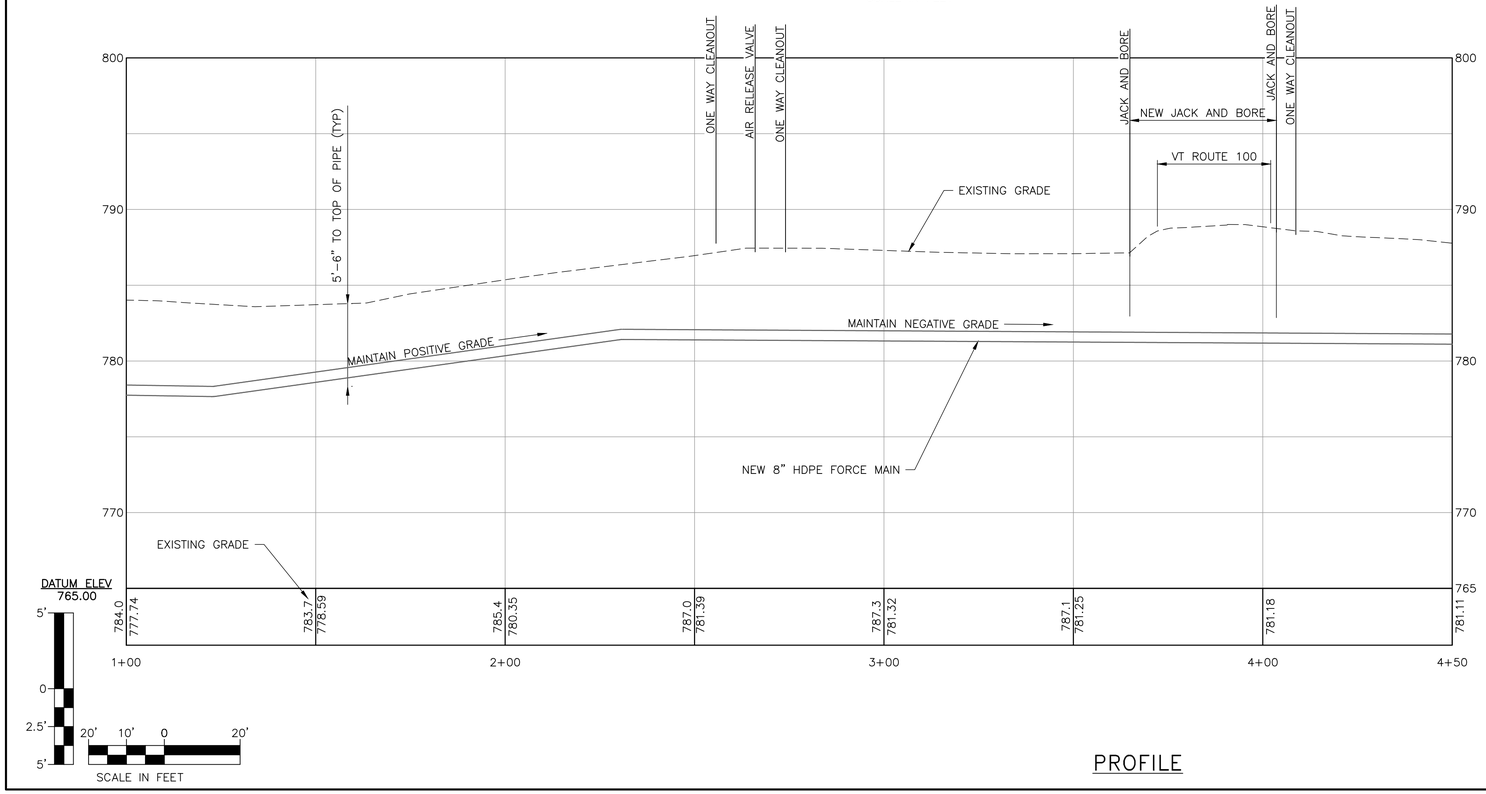

PROFILE

BID SET
NOT FOR CONSTRUCTION 7/16/2026

DuBois & King inc.
www.dubois-king.com
© Copyright 2026 DuBois & King inc.

STATE OF VERMONT
ASHLEY B. BOUCHARD
PROFESSIONAL ENGINEER
07-16-2026

BID SET
NOT FOR CONSTRUCTION

REVISIONS

NUMBER	DATE	REVISION DESCRIPTION	BY

CLIENT NAME
TOWN OF WAITSFIELD

PROJECT NAME
WAITSFIELD COMMUNITY WASTEWATER SYSTEM

PROJECT ADDRESS
4144 MAIN STREET
WAITSFIELD, VERMONT 05673

SHEET TITLE
CONTRACT NO. 2
PLAN AND PROFILE

STA. 1+00 - 4+50

D&K PROJECT #	PROJ. ENG.
227947	JBA
DRAWN BY	CHECKED BY
EBS	DDC

DATE
JULY 2026

SHEET NUMBER
C1

I:\2\227947 Waitsfield Water and Wastewater Feasibility Stud\Drawings\Civil\Sheet Breakouts\227947-BDR-1-10.dwg 8/27/2026 10:22 AM

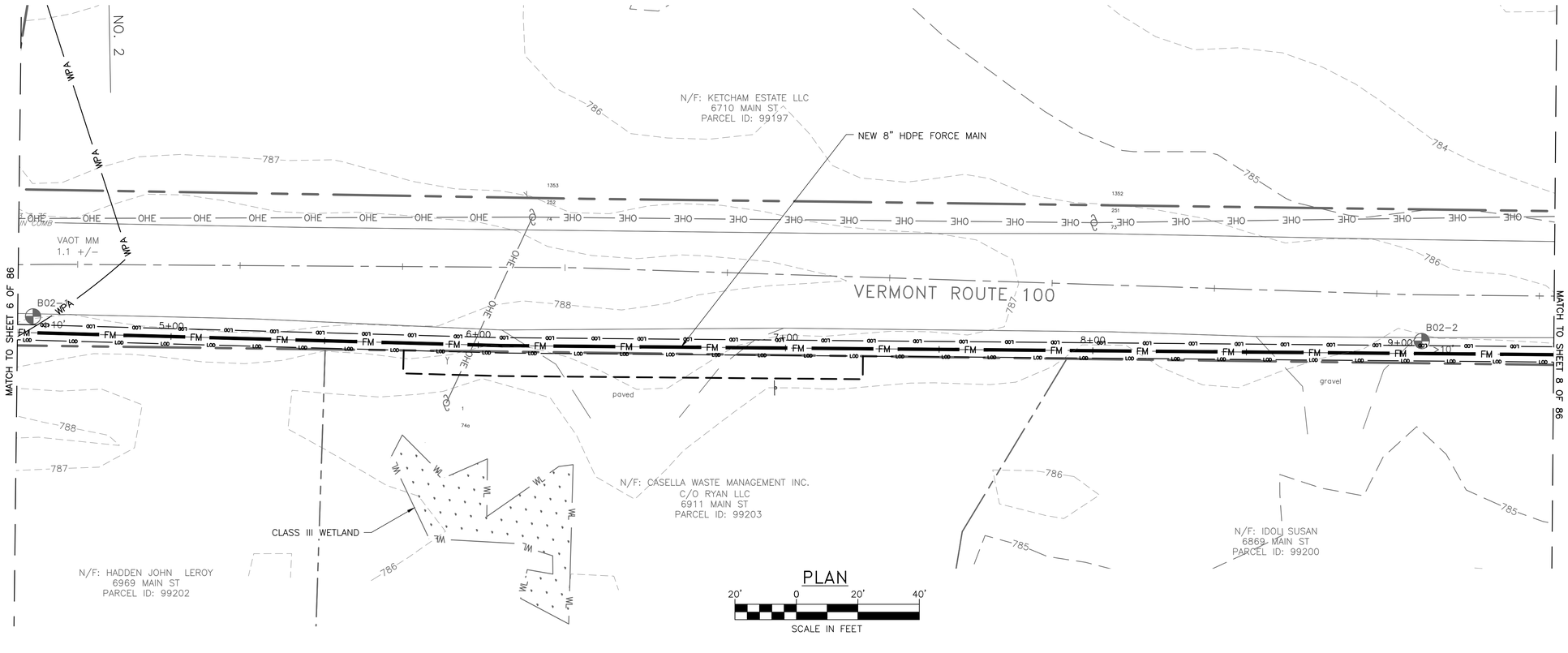

PLAN

20' 0 20' 40'
SCALE IN FEET

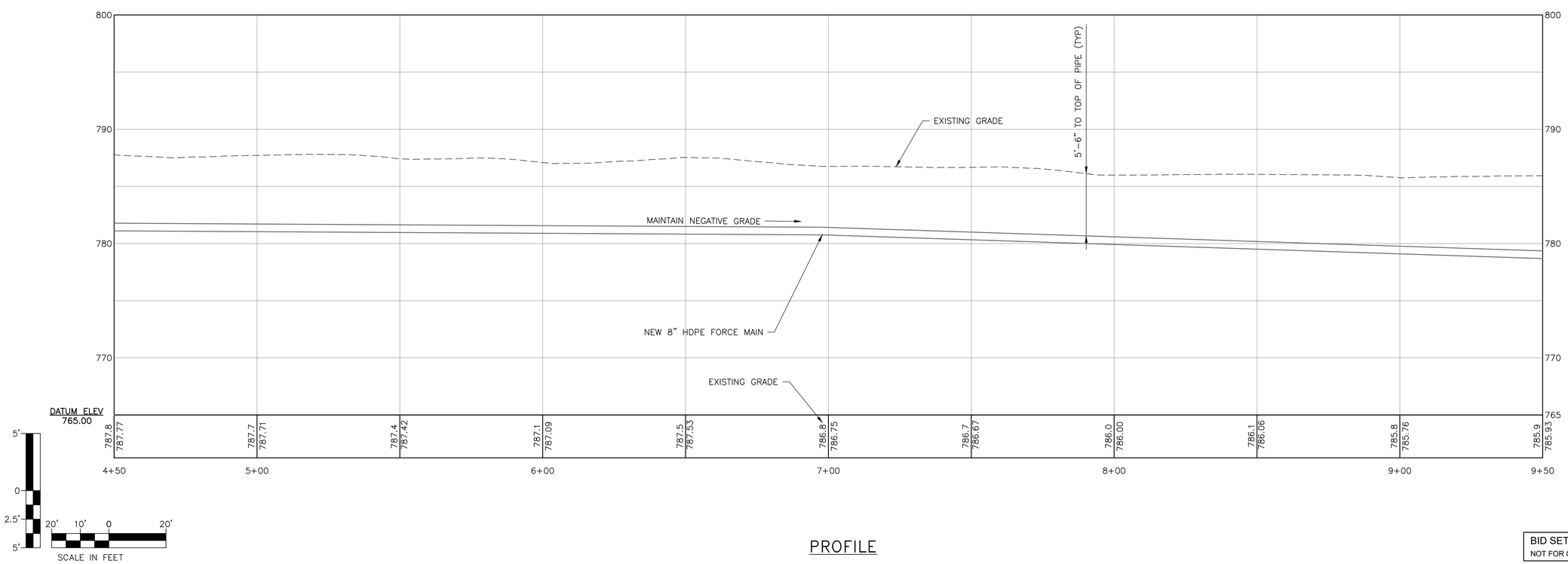

PROFILE

BID SET
NOT FOR CONSTRUCTION 7/16/2026

DuBois & King inc.
www.dubois-king.com
© Copyright 2026 DuBois & King inc.

STATE OF VERMONT
BID SET
NOT FOR CONSTRUCTION
07-16-2026

REVISIONS

NUMBER	DATE	REVISION DESCRIPTION	BY

CLIENT NAME
TOWN OF WAITSFIELD

PROJECT NAME
WAITSFIELD COMMUNITY WASTEWATER SYSTEM

PROJECT ADDRESS
4144 MAIN STREET
WAITSFIELD, VERMONT 05673

SHEET TITLE
CONTRACT NO. 2
PLAN AND PROFILE

STA. 4+50 - 9+50

D&K PROJECT #	PROJ. ENG.
227947	JBA
DRAWN BY	CHECKED BY
EBS	DDC

DATE
JULY 2026

SHEET NUMBER
C2

SHEET: 7 of 86

I:\21\227947 Waitsfield Water and Wastewater Feasibility Stud\Drawings\Civil\Sheet Breakouts\227947-BDR-1-10.dwg 8/27/2026 10:23 AM

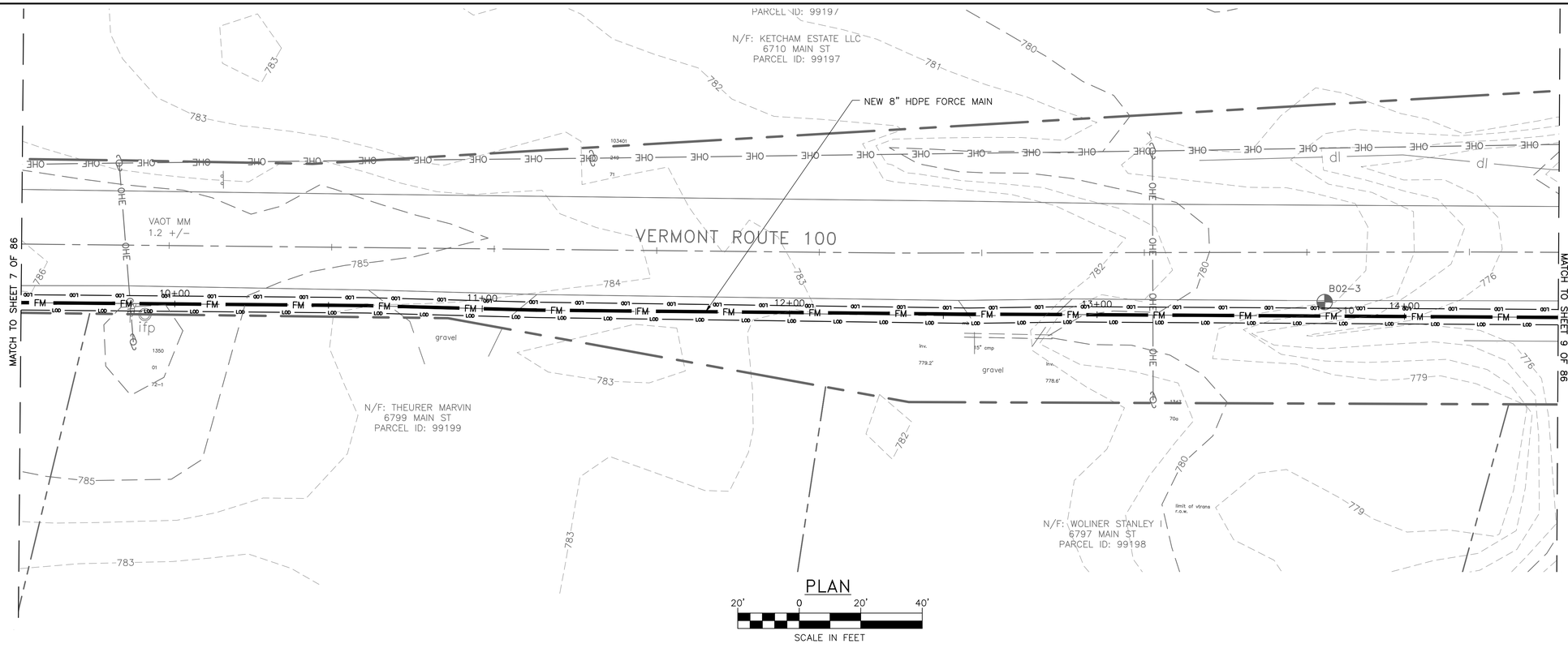

PLAN

20' 0 20' 40'

SCALE IN FEET

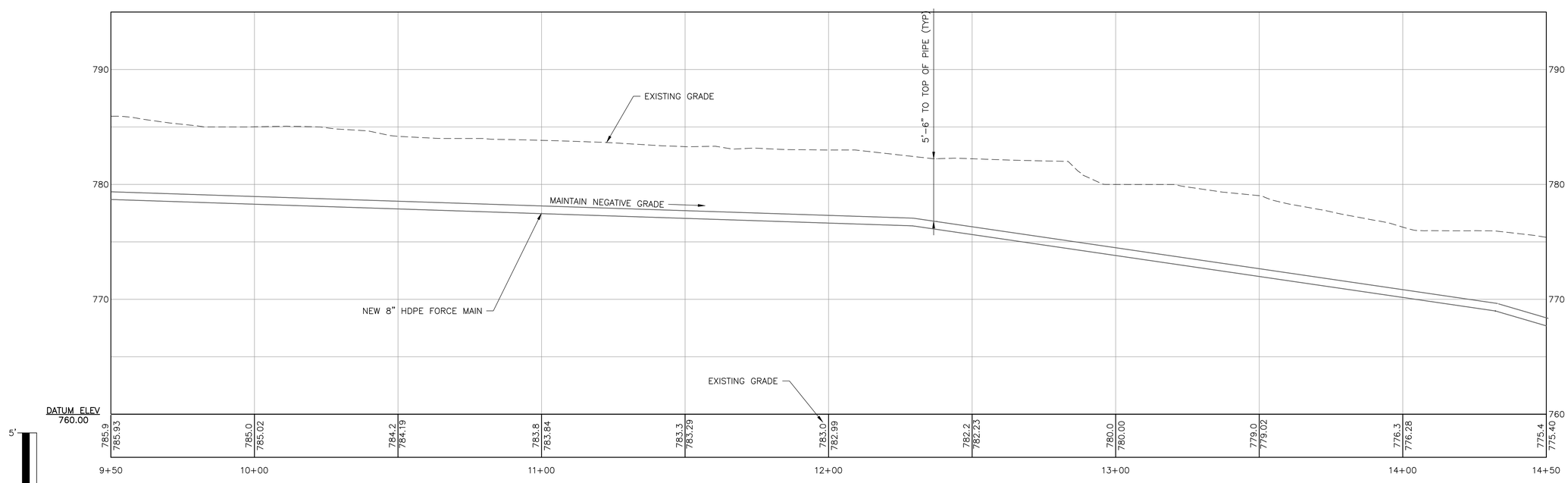

5' 0 2.5' 5'

20' 10' 0 20'

SCALE IN FEET

PROFILE

BID SET
NOT FOR CONSTRUCTION 7/16/2026

DuBois & King inc.

www.dubois-king.com

© Copyright 2026 DuBois & King inc.

STATE OF VERMONT
ASHLEY BOUCHARD
PROFESSIONAL ENGINEER
07-16-2026

BID SET
NOT FOR CONSTRUCTION

REVISIONS

NUMBER	DATE	REVISION DESCRIPTION	BY

CLIENT NAME
TOWN OF WAITSFIELD

PROJECT NAME
WAITSFIELD COMMUNITY WASTEWATER SYSTEM

PROJECT ADDRESS
4144 MAIN STREET
WAITSFIELD, VERMONT 05673

SHEET TITLE
CONTRACT NO. 2
PLAN AND PROFILE

STA. 9+50 - 14+50

D&K PROJECT #	PROJ. ENG.
227947	JBA
DRAWN BY	CHECKED BY
EBS	DDC

DATE
JULY 2026

SHEET NUMBER
C3

SHEET: 8 of 86

I:\21\227947 Waitsfield Water and Wastewater Feasibility Stud\Drawings\Civil\Sheet Breakouts\227947-BDR-1-10.dwg 8/27/2026 10:24 AM

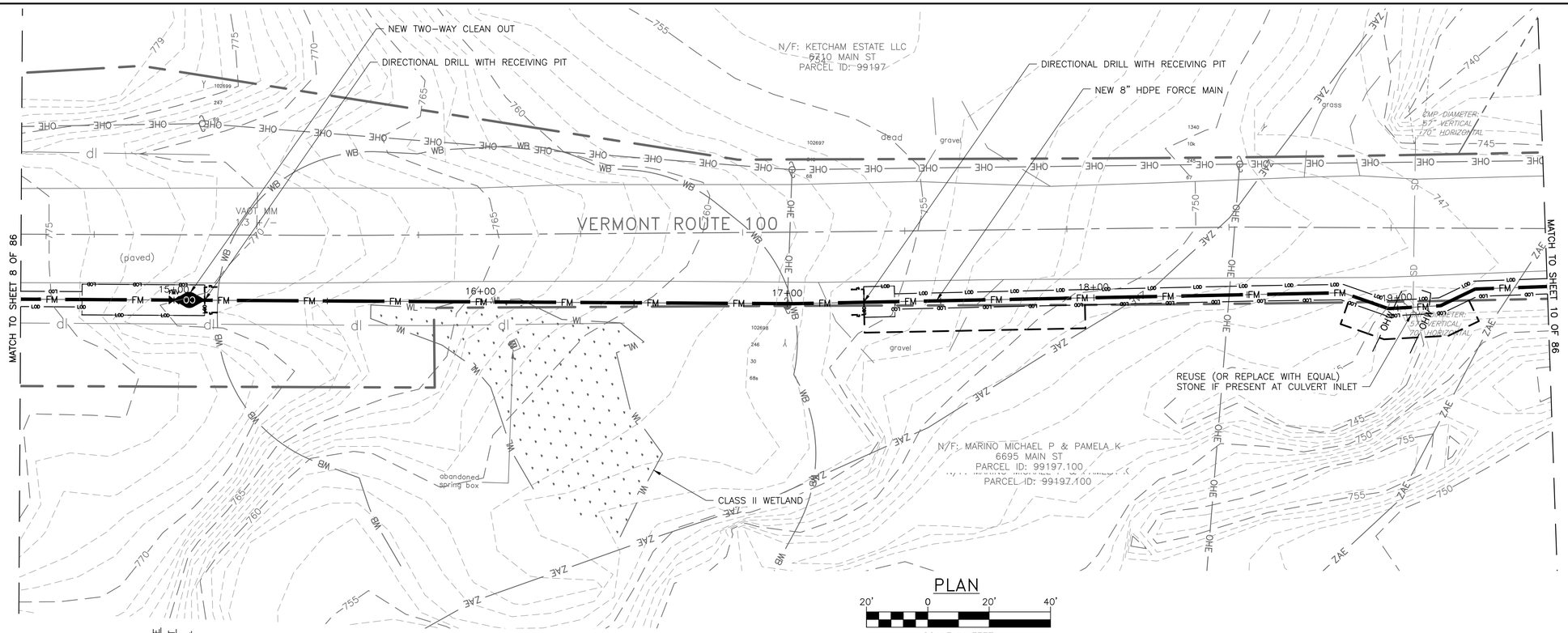

PLAN

20' 0 20' 40'

SCALE IN FEET

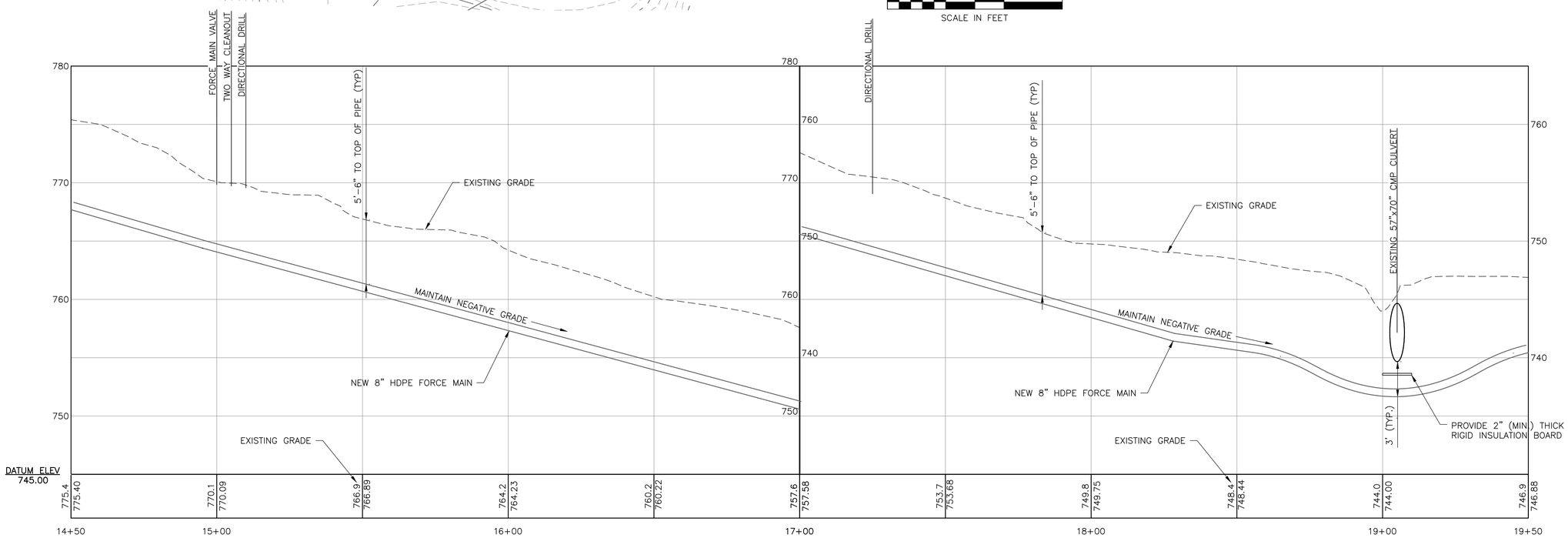

PROFILE

5' 0 2.5' 5'

20' 10' 0 20'

SCALE IN FEET

BID SET
NOT FOR CONSTRUCTION 7/16/2026

DuBois & King inc.

www.dubois-king.com

© Copyright 2026 DuBois & King inc.

STATE OF VERMONT
ASHLEY B. BOSCO
PROFESSIONAL ENGINEER
07-16-2026

BID SET
NOT FOR CONSTRUCTION

REVISIONS

NUMBER	DATE	REVISION DESCRIPTION	BY

CLIENT NAME
TOWN OF WAITSFIELD

PROJECT NAME
WAITSFIELD COMMUNITY WASTEWATER SYSTEM

PROJECT ADDRESS
4144 MAIN STREET
WAITSFIELD, VERMONT 05673

SHEET TITLE
CONTRACT NO. 2
PLAN AND PROFILE

STA. 14+50 - 19+50

D&K PROJECT #	PROJ. ENG.
227947	JBA
DRAWN BY	CHECKED BY
EBS	DDC

DATE
JULY 2026

SHEET NUMBER
C4

SHEET: 9 of 86

I:\2\227947 Waitsfield Water and Wastewater Feasibility Stud\Drawings\Civil\Sheet Breakouts\227947-BDR-1-10.dwg 8/27/2026 10:25 AM

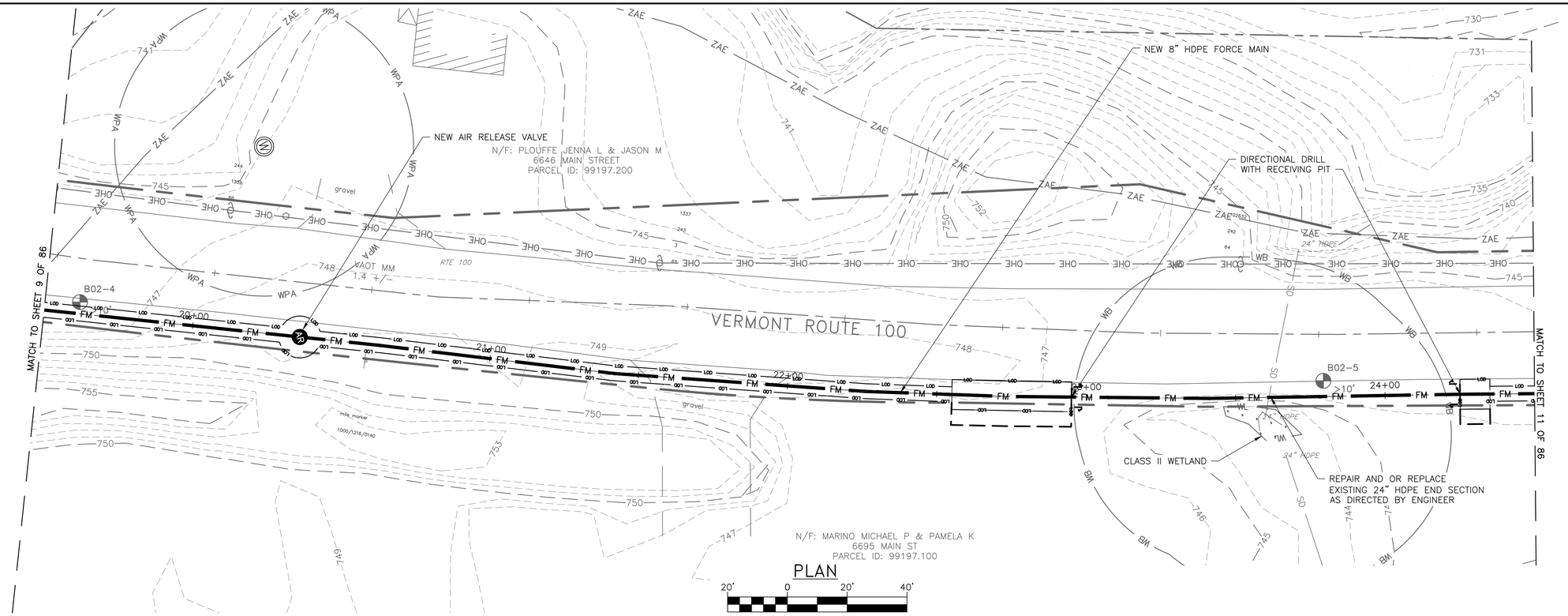

PLAN

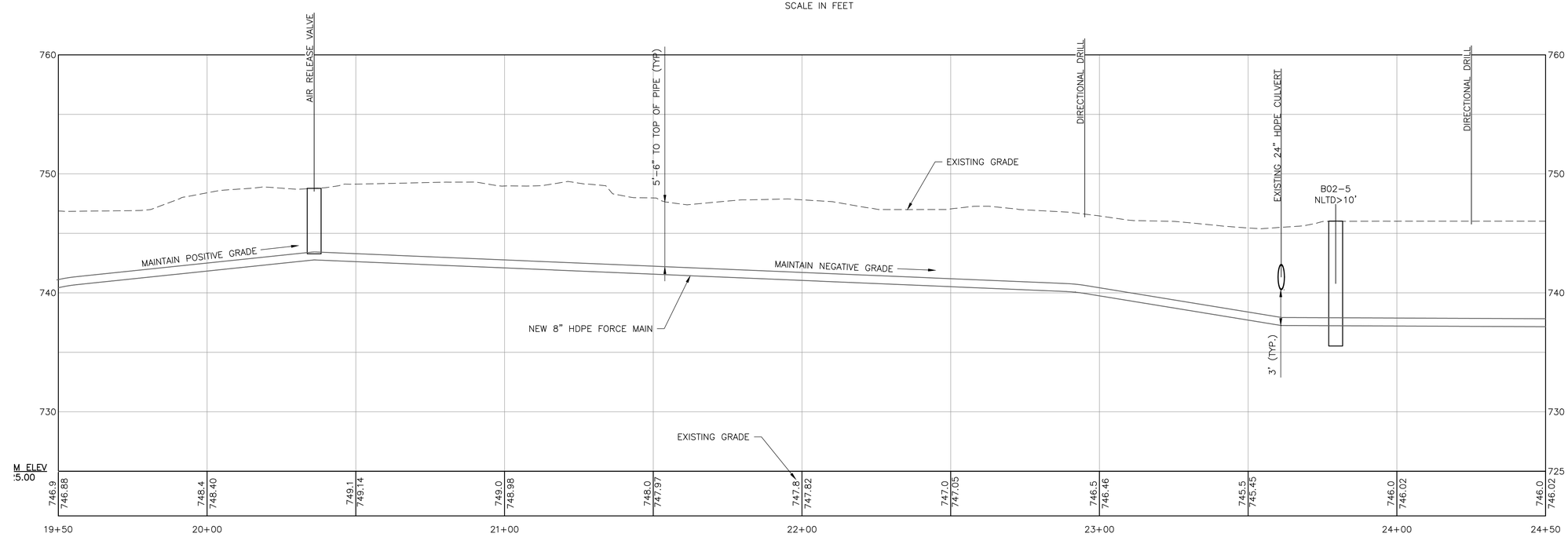

PROFILE

BID SET
NOT FOR CONSTRUCTION 7/16/2026

DuBois & King inc.
www.dubois-king.com
© Copyright 2026 DuBois & King inc.

STATE OF VERMONT
DAVID A. SHEE
PROFESSIONAL ENGINEER
07-16-2026

BID SET
NOT FOR CONSTRUCTION

REVISIONS

NUMBER	DATE	REVISION DESCRIPTION	BY

CLIENT NAME
TOWN OF WAITSFIELD

PROJECT NAME
WAITSFIELD COMMUNITY WASTEWATER SYSTEM

PROJECT ADDRESS
4144 MAIN STREET
WAITSFIELD, VERMONT 05673

SHEET TITLE
CONTRACT NO. 2
PLAN AND PROFILE

STA. 19+50 - 24+50

D&K PROJECT #	PROJ. ENG.
227947	JBA
DRAWN BY	CHECKED BY
EBS	DDC

DATE
JULY 2026

SHEET NUMBER
C5

SHEET: 10 of 86

I:\2\227947 Waitsfield Water and Wastewater Feasibility Stud\Drawings\Civil\Sheet Breakouts\227947-BDR-1-10.dwg 8/27/2026 10:26 AM

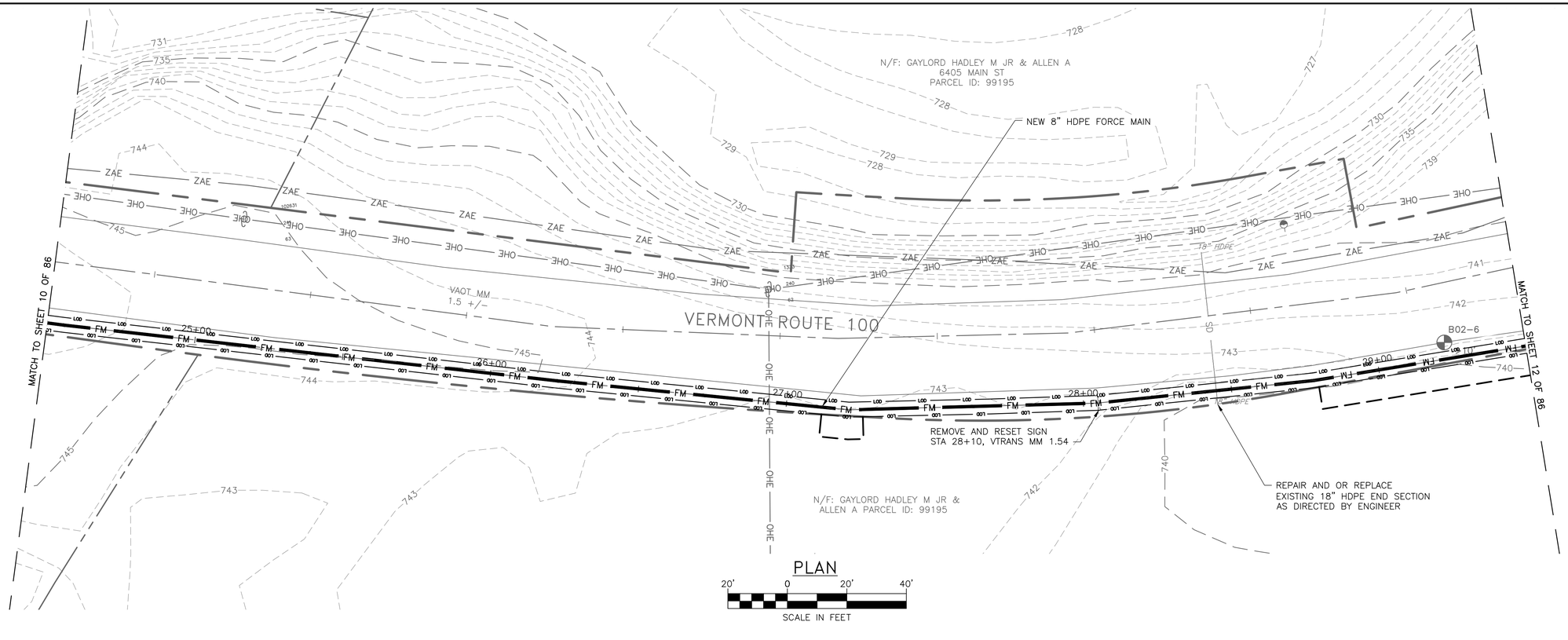

PLAN

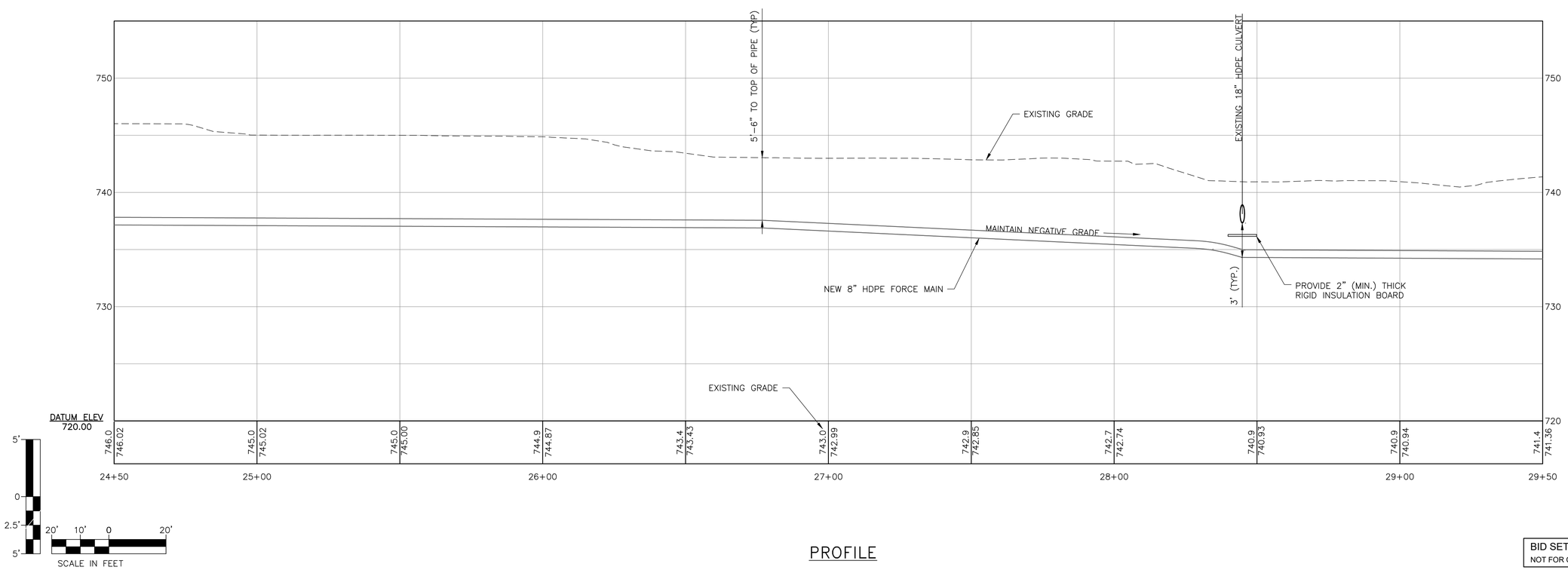

PROFILE

BID SET
NOT FOR CONSTRUCTION 7/16/2026

DuBois & King inc.
www.dubois-king.com
© Copyright 2026 DuBois & King inc.

BID SET
NOT FOR
CONSTRUCTION

REVISIONS			
NUMBER	DATE	REVISION DESCRIPTION	BY

CLIENT NAME
TOWN OF
WAITSFIELD

PROJECT NAME
WAITSFIELD
COMMUNITY
WASTEWATER
SYSTEM

PROJECT ADDRESS
4144 MAIN STREET
WAITSFIELD, VERMONT 05673

SHEET TITLE
CONTRACT NO. 2
PLAN AND PROFILE

STA. 24+50 - 29+50

D&K PROJECT #	PROJ. ENG.
227947	JBA
DRAWN BY	CHECKED BY
EBS	DDC

DATE
JULY 2026

SHEET NUMBER
C6

I:\2\227947 Waitsfield Water and Wastewater Feasibility Stud\Drawings\Civil\Sheet Breakouts\227947-BDR-1-10.dwg 8/27/2026 10:27 AM

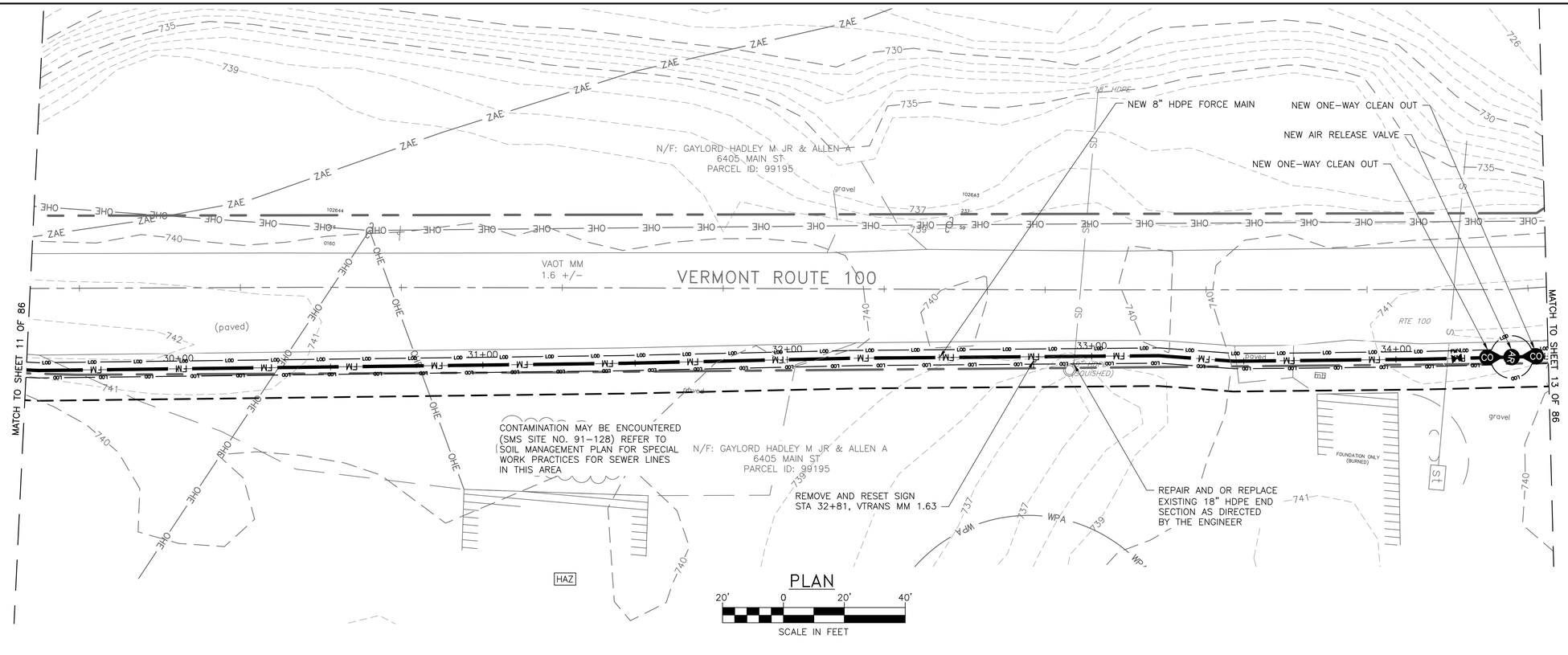

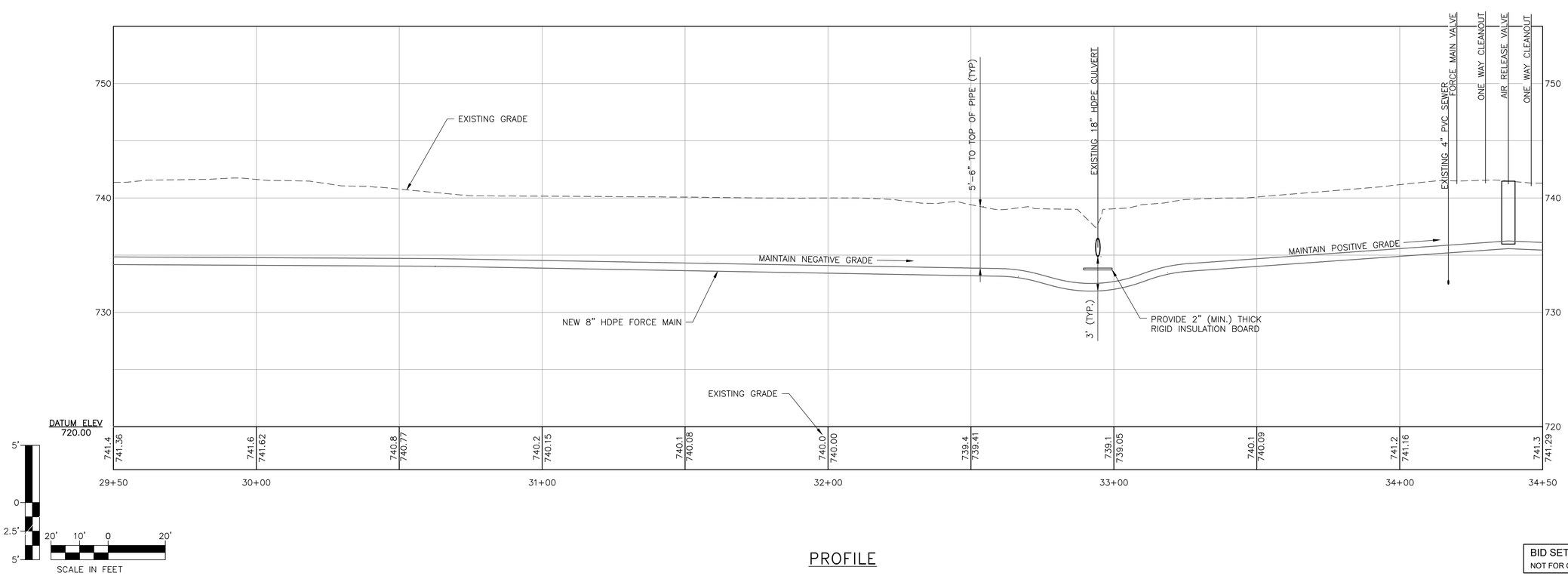

BID SET
NOT FOR CONSTRUCTION 7/16/2026

DuBois & King inc.
www.dubois-king.com
© Copyright 2026 DuBois & King inc.

STATE OF VERMONT
ASHLEY BOUCHARD
PROFESSIONAL ENGINEER
07-16-2026
BID SET
NOT FOR CONSTRUCTION

REVISIONS

NUMBER	DATE	REVISION DESCRIPTION	BY

CLIENT NAME
TOWN OF WAITSFIELD

PROJECT NAME
WAITSFIELD COMMUNITY WASTEWATER SYSTEM

PROJECT ADDRESS
4144 MAIN STREET
WAITSFIELD, VERMONT 05673

SHEET TITLE
CONTRACT NO. 2
PLAN AND PROFILE

STA. 29+50 - 34+50

D&K PROJECT #	PROJ. ENG.
227947	JBA
DRAWN BY	CHECKED BY
EBS	DDC

DATE
JULY 2026

SHEET NUMBER
C7

SHEET: 12 of 86

I:\21\227947 Waitsfield Water and Wastewater Feasibility Stud\Drawings\Civil\Sheet Breakouts\227947-BDR-1-10.dwg 8/27/2026 10:28 AM

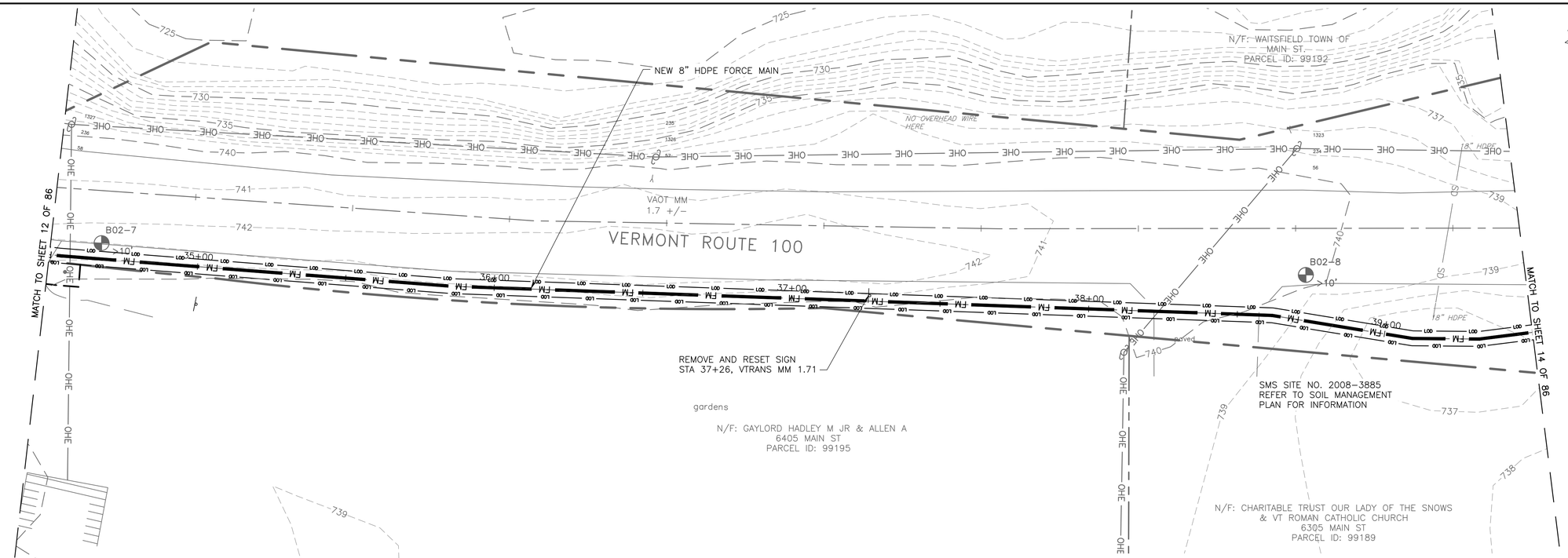

PLAN

20' 0 20' 40'

SCALE IN FEET

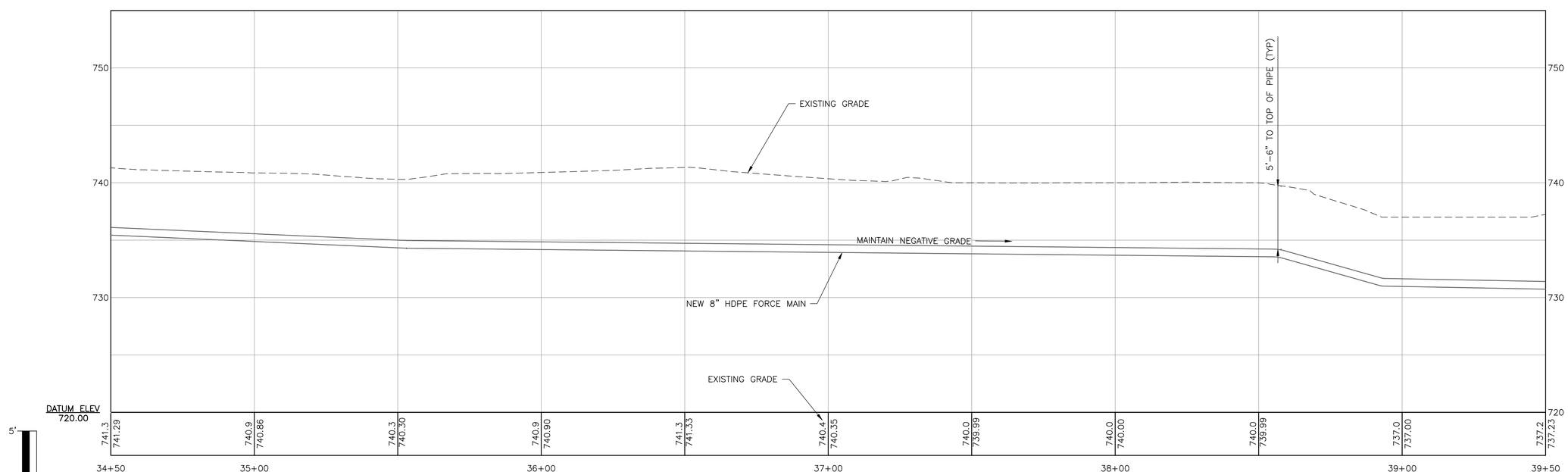

PROFILE

BID SET
NOT FOR CONSTRUCTION 7/16/2026

DuBois & King inc.

www.dubois-king.com

© Copyright 2026 DuBois & King inc.

STATE OF VERMONT
ASHLEY BOSTWICK
PROFESSIONAL ENGINEER
07-16-2026

BID SET
NOT FOR CONSTRUCTION

REVISIONS

NUMBER	DATE	REVISION DESCRIPTION	BY

CLIENT NAME
TOWN OF WAITSFIELD

PROJECT NAME
WAITSFIELD COMMUNITY WASTEWATER SYSTEM

PROJECT ADDRESS
4144 MAIN STREET
WAITSFIELD, VERMONT 05673

SHEET TITLE
CONTRACT NO. 2
PLAN AND PROFILE

STA. 34+50 - 39+50

D&K PROJECT #	PROJ. ENG.
227947	JBA
DRAWN BY	CHECKED BY
EBS	DDC

DATE
JULY 2026

SHEET NUMBER
C8

SHEET: 13 of 86

I:\21\227947 Waitsfield Water and Wastewater Feasibility Stud\Drawings\Civil\Sheet Breakouts\227947-BDR-1-10.dwg 8/27/2026 10:29 AM

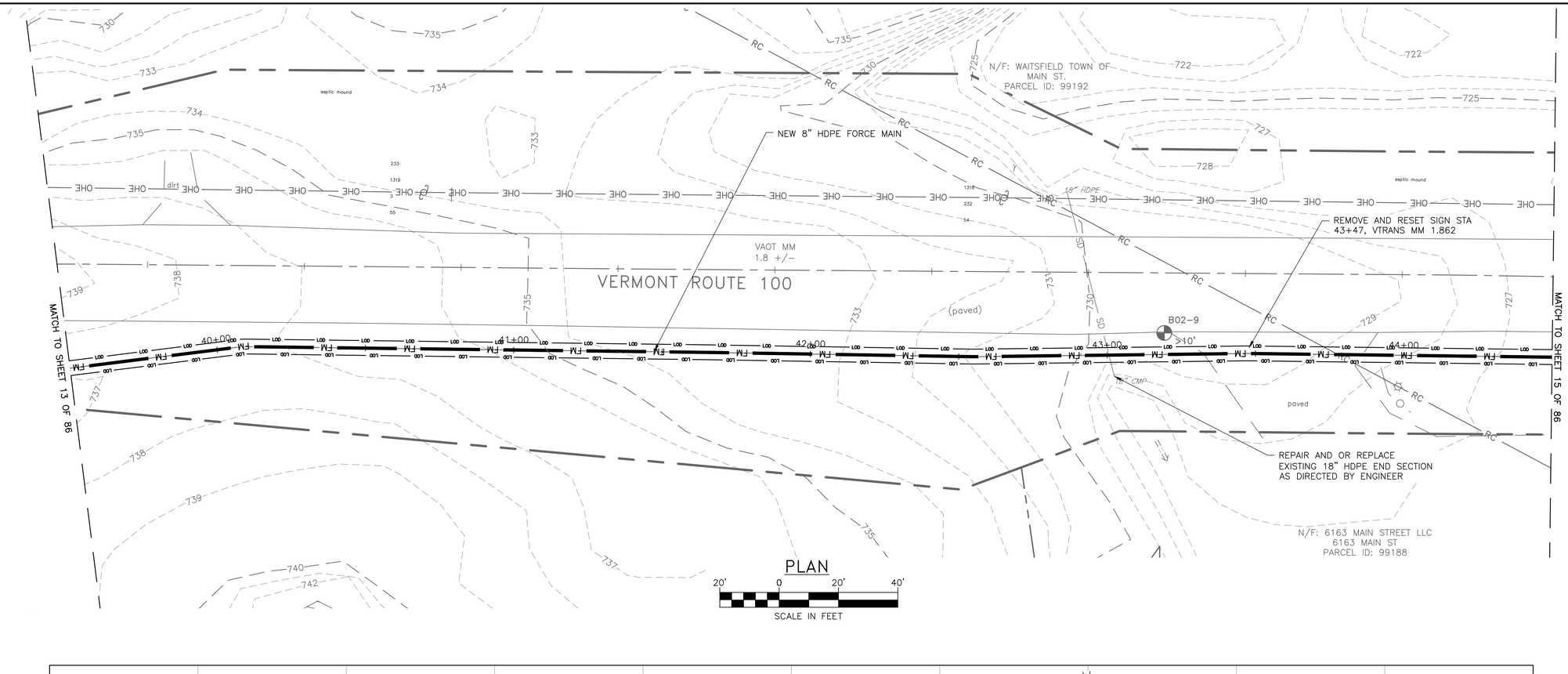

PLAN

20' 0 20' 40'

SCALE IN FEET

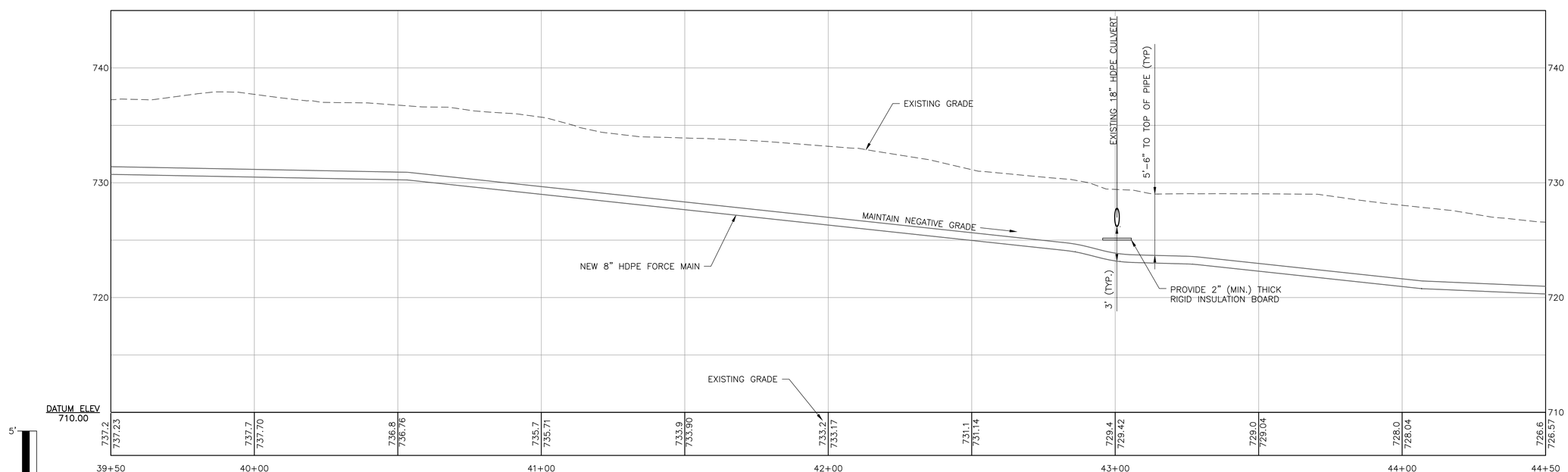

5' 0 2.5' 5'

20' 10' 0 20'

SCALE IN FEET

PROFILE

BID SET
NOT FOR CONSTRUCTION 7/16/2026

DuBois & King inc.

www.dubois-king.com

© Copyright 2026 DuBois & King inc.

STATE OF VERMONT
ASHLEY BRIGGS
PROFESSIONAL ENGINEER
07-16-2026

BID SET
NOT FOR CONSTRUCTION

REVISIONS

NUMBER	DATE	REVISION DESCRIPTION	BY

CLIENT NAME
TOWN OF WAITSFIELD

PROJECT NAME
WAITSFIELD COMMUNITY WASTEWATER SYSTEM

PROJECT ADDRESS
4144 MAIN STREET
WAITSFIELD, VERMONT 05673

SHEET TITLE
CONTRACT NO. 2
PLAN AND PROFILE

STA. 39+50 - 44+50

D&K PROJECT #	PROJ. ENG.
227947	JBA
DRAWN BY	CHECKED BY
EBS	DDC

DATE
JULY 2026

SHEET NUMBER
C9

SHEET: 14 of 86

I:\2\227947 Waitsfield Water and Wastewater Feasibility Stud\Drawings\Civil\Sheet Breakouts\227947-BDR-1-10.dwg 8/27/2026 10:30 AM

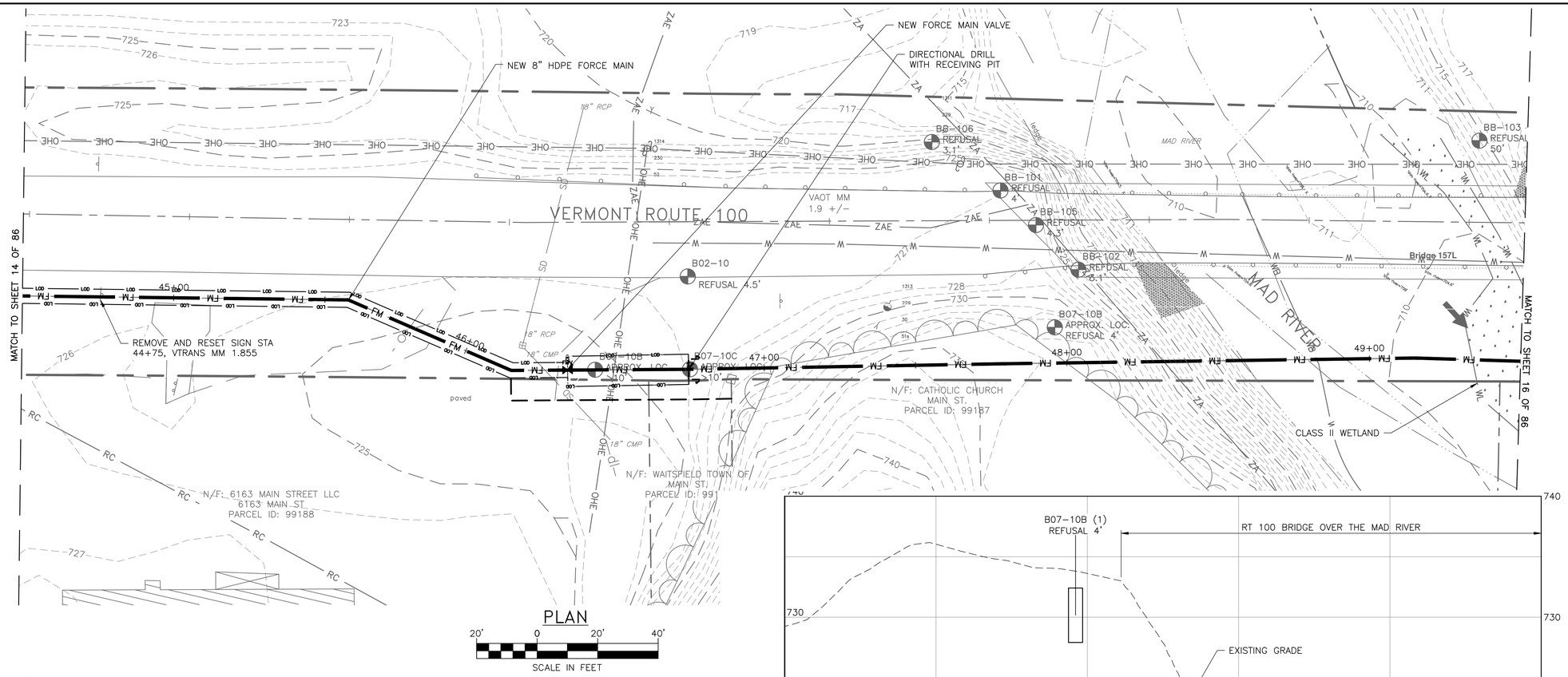

PLAN

20' 0 20' 40'

SCALE IN FEET

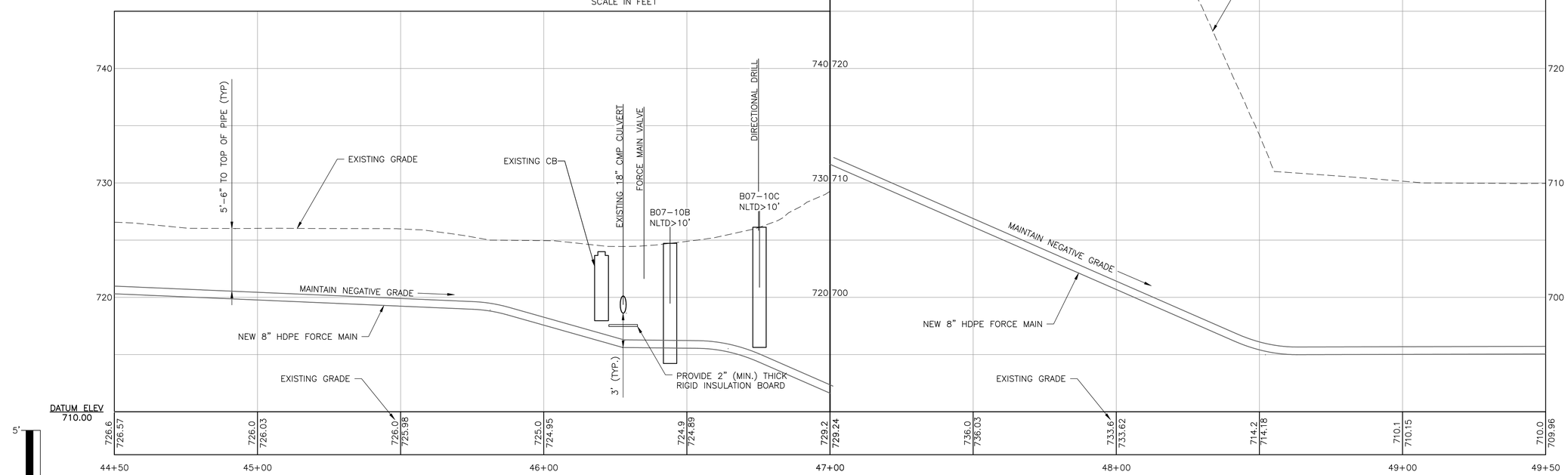

PROFILE

BID SET
NOT FOR CONSTRUCTION 7/16/2026

DuBois & King inc.

www.dubois-king.com

© Copyright 2026 DuBois & King inc.

STATE OF VERMONT
ASHLEY B. CLOUTIER
PROFESSIONAL ENGINEER
07-16-2026

BID SET
NOT FOR CONSTRUCTION

REVISIONS

NUMBER	DATE	REVISION DESCRIPTION	BY

CLIENT NAME
TOWN OF WAITSFIELD

PROJECT NAME
WAITSFIELD COMMUNITY WASTEWATER SYSTEM

PROJECT ADDRESS
4144 MAIN STREET
WAITSFIELD, VERMONT 05673

SHEET TITLE
CONTRACT NO. 2
PLAN AND PROFILE

STA 44+50 - 49+50

D&K PROJECT #	PROJ. ENG.
227947	JBA
DRAWN BY	CHECKED BY
EBS	DDC

DATE
JULY 2026

SHEET NUMBER
C10

SHEET: 15 of 86

I:\227947 Waitsfield Water and Wastewater Feasibility Stud\Drawings\Civil\Sheet Breakouts\227947-BDR-1-10.dwg 8/27/2026 10:31 AM

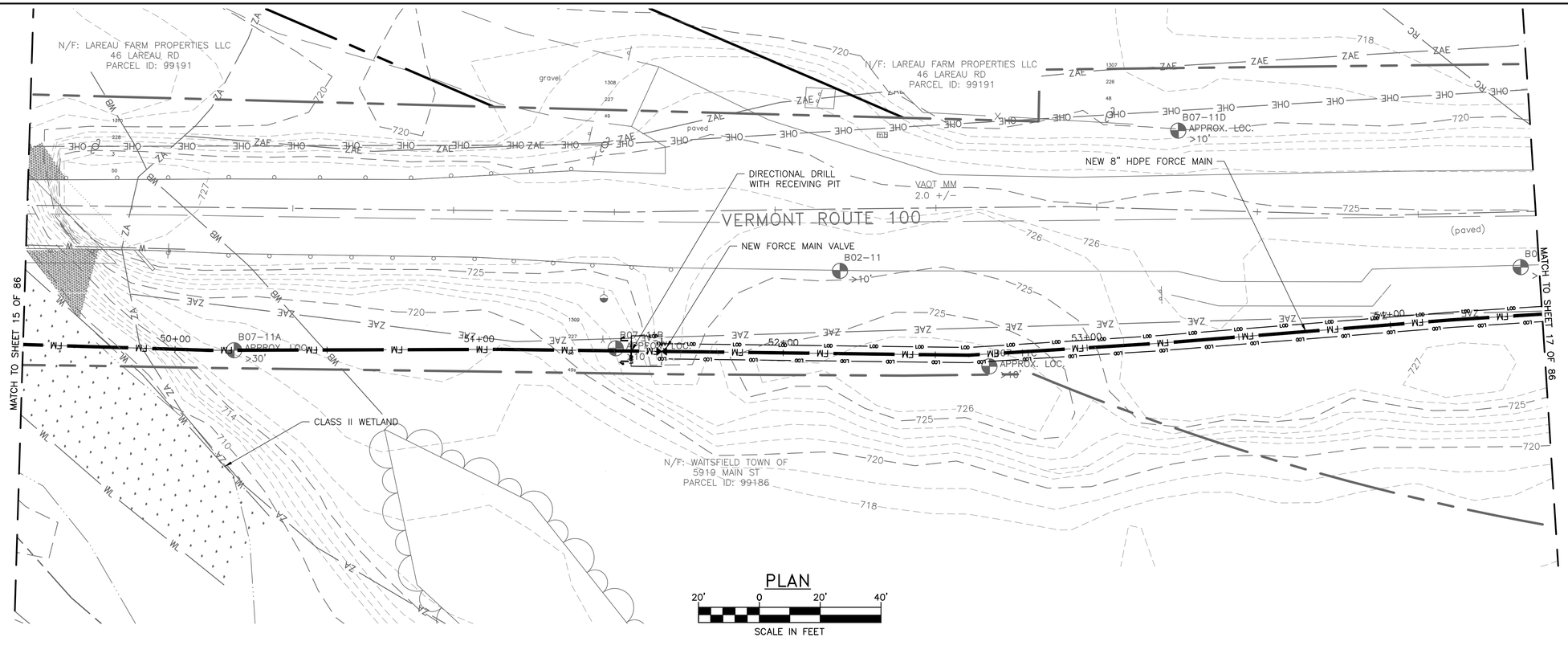

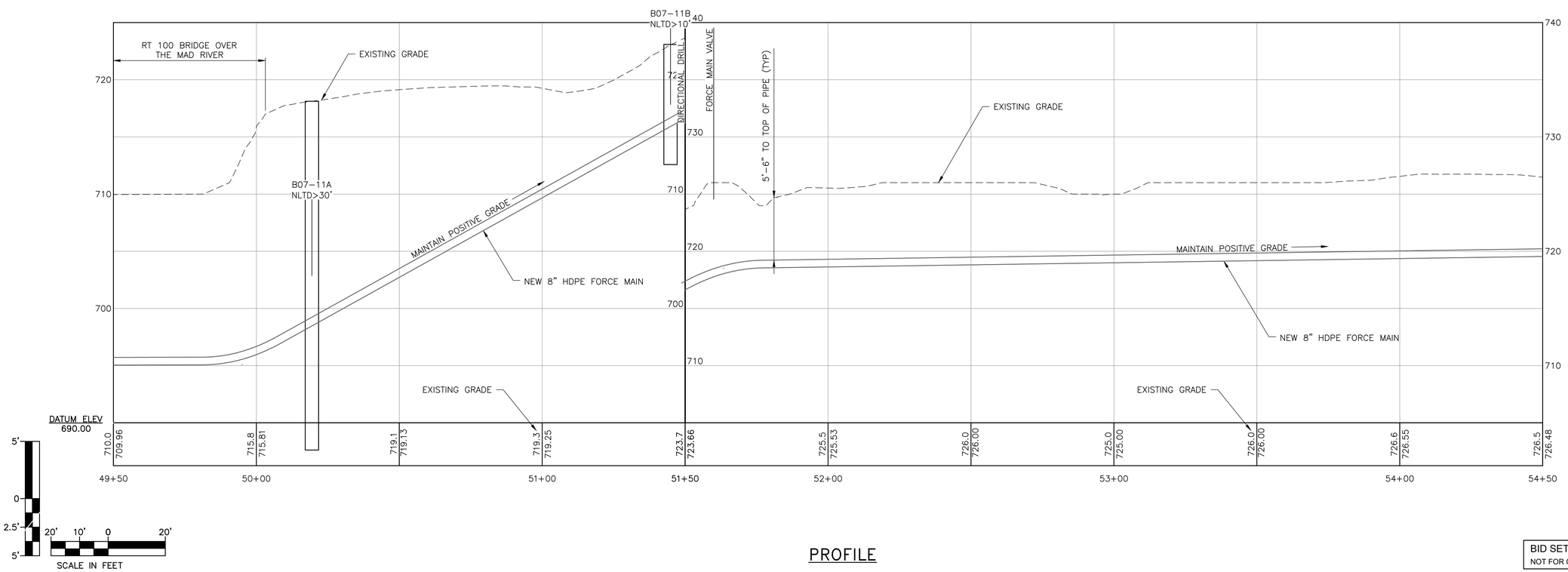

PROFILE

BID SET
NOT FOR CONSTRUCTION 7/16/2026

DuBois & King inc.
www.dubois-king.com
© Copyright 2026 DuBois & King inc.

STATE OF VERMONT
ASHLEY B. CLEMENS
PROFESSIONAL ENGINEER
07-16-2026
BID SET
NOT FOR CONSTRUCTION

REVISIONS			
NUMBER	DATE	REVISION DESCRIPTION	BY

CLIENT NAME
TOWN OF WAITSFIELD

PROJECT NAME
WAITSFIELD COMMUNITY WASTEWATER SYSTEM

PROJECT ADDRESS
4144 MAIN STREET
WAITSFIELD, VERMONT 05673

SHEET TITLE
CONTRACT NO. 2
PLAN AND PROFILE

STA 49+50 - 54+50

D&K PROJECT #	PROJ. ENG.
227947	JBA
DRAWN BY	CHECKED BY
EBS	DDC

DATE
JULY 2026

SHEET NUMBER
C11

SHEET: 16 of 86

I:\21\227947 Waitsfield Water and Wastewater Feasibility Stud\Drawings\Civil\Sheet Breakouts\227947-BDR-10-20.dwg 8/27/2026 10:34 AM

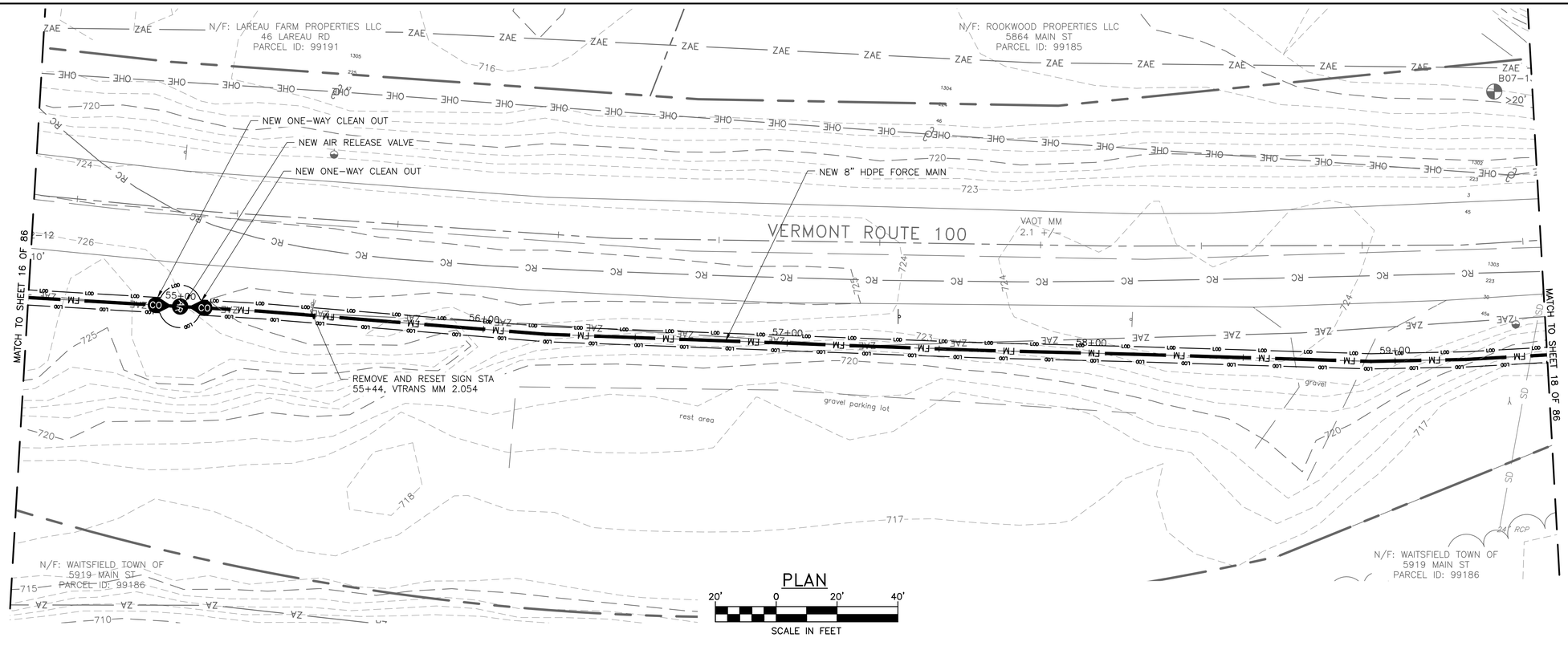

PLAN

20' 0 20' 40'

SCALE IN FEET

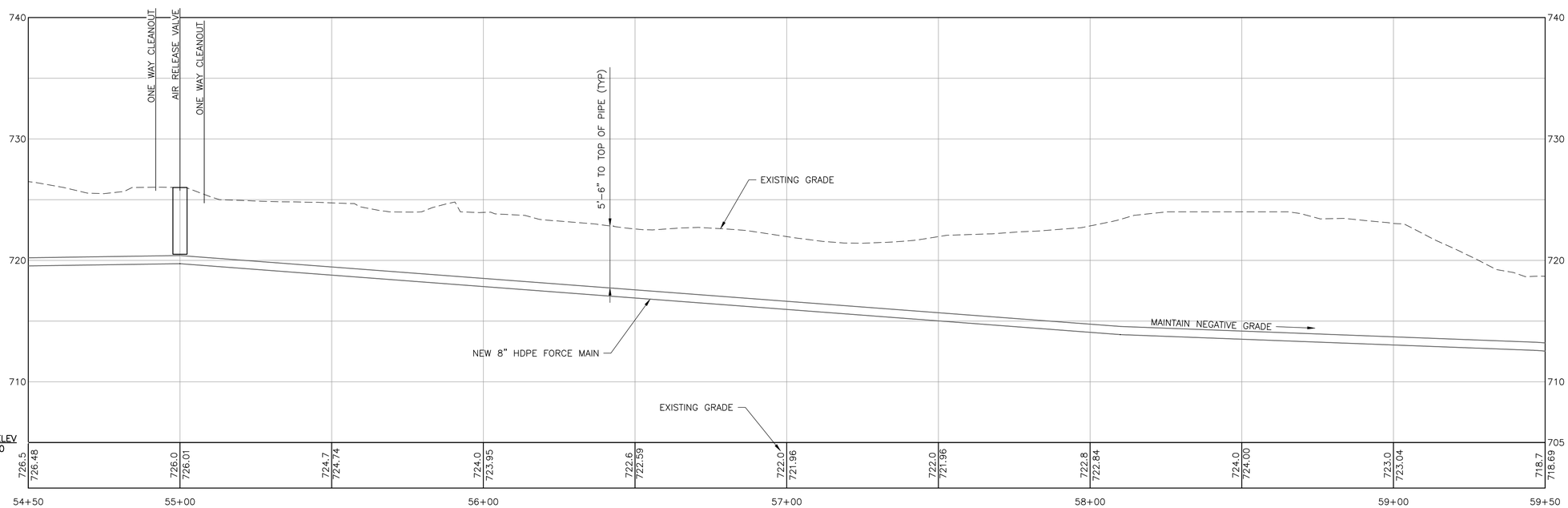

5' 0 2.5' 5'

20' 10' 0 20'

SCALE IN FEET

PROFILE

BID SET
NOT FOR CONSTRUCTION 7/16/2026

DuBois & King inc.

www.dubois-king.com

© Copyright 2026 DuBois & King inc.

STATE OF VERMONT
ASHLEY BRAGG
PROFESSIONAL ENGINEER
07-16-2026

BID SET
NOT FOR CONSTRUCTION

REVISIONS

NUMBER	DATE	REVISION DESCRIPTION	BY

CLIENT NAME
TOWN OF WAITSFIELD

PROJECT NAME
WAITSFIELD COMMUNITY WASTEWATER SYSTEM

PROJECT ADDRESS
4144 MAIN STREET
WAITSFIELD, VERMONT 05673

SHEET TITLE
CONTRACT NO. 2
PLAN AND PROFILE

STA 54+50 - 59+50

D&K PROJECT #	PROJ. ENG.
227947	JBA
DRAWN BY	CHECKED BY
EBS	DDC

DATE
JULY 2026

SHEET NUMBER
C12

SHEET: 17 of 86

I:\21\227947 Waitsfield Water and Wastewater Feasibility Stud\Drawings\Civil\Sheet Breakouts\227947-BDR-10-20.dwg 8/27/2026 10:35 AM

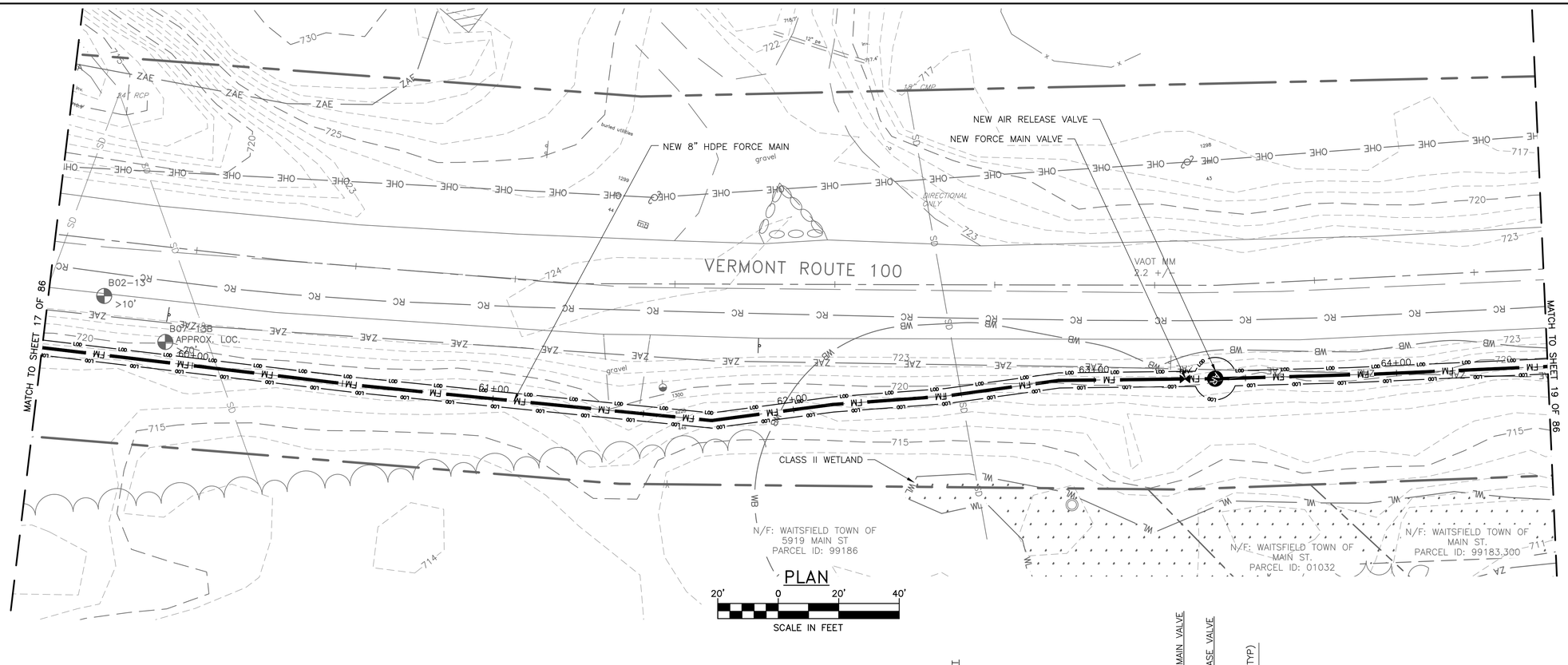

PLAN

20' 0 20' 40'

SCALE IN FEET

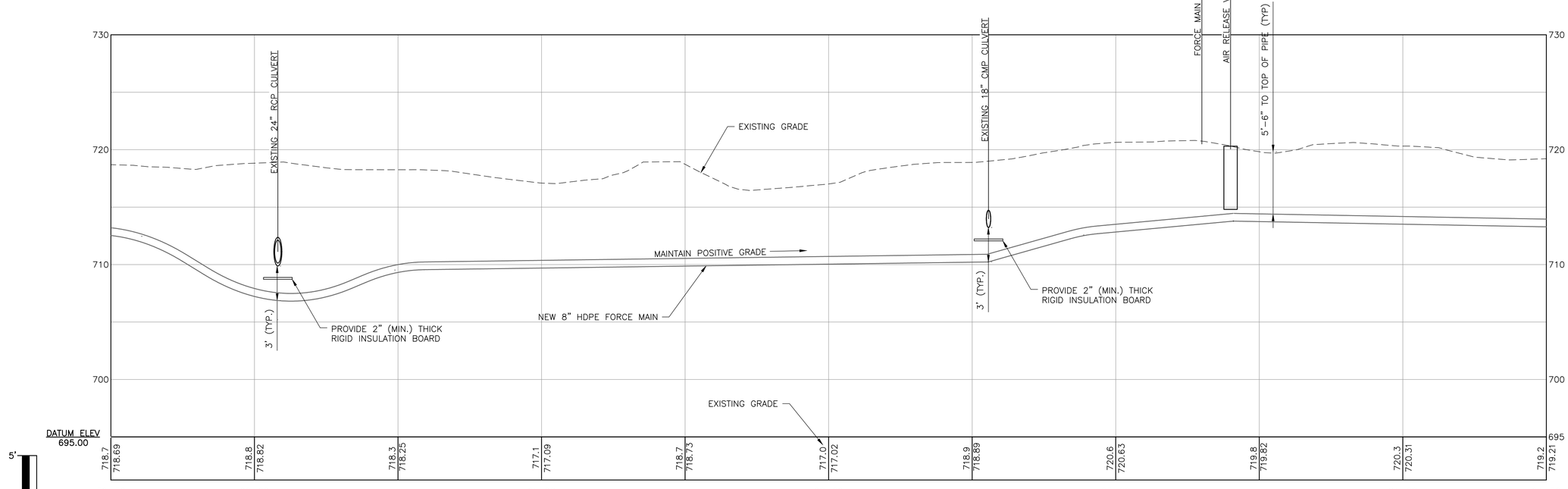

5' 0 2.5' 5'

20' 10' 0 20'

SCALE IN FEET

PROFILE

BID SET
NOT FOR CONSTRUCTION 7/16/2026

DuBois & King inc.

www.dubois-king.com

© Copyright 2026 DuBois & King inc.

STATE OF VERMONT
DAVID A. SHEE
No. 9375
PROFESSIONAL ENGINEER
07-16-2026

BID SET
NOT FOR CONSTRUCTION

REVISIONS			
NUMBER	DATE	REVISION DESCRIPTION	BY

CLIENT NAME
TOWN OF WAITSFIELD

PROJECT NAME
WAITSFIELD COMMUNITY WASTEWATER SYSTEM

PROJECT ADDRESS
4144 MAIN STREET
WAITSFIELD, VERMONT 05673

SHEET TITLE
CONTRACT NO. 2
PLAN AND PROFILE

STA 59+50 - 64+50

D&K PROJECT #	PROJ. ENG.
227947	JBA
DRAWN BY	CHECKED BY
EBS	DDC

DATE
JULY 2026

SHEET NUMBER
C13

SHEET: 18 of 86

I:\2\227947 Waitsfield Water and Wastewater Feasibility Stud\Drawings\Civil\Sheet Breakouts\227947-BDR-10-20.dwg 8/27/2026 10:36 AM

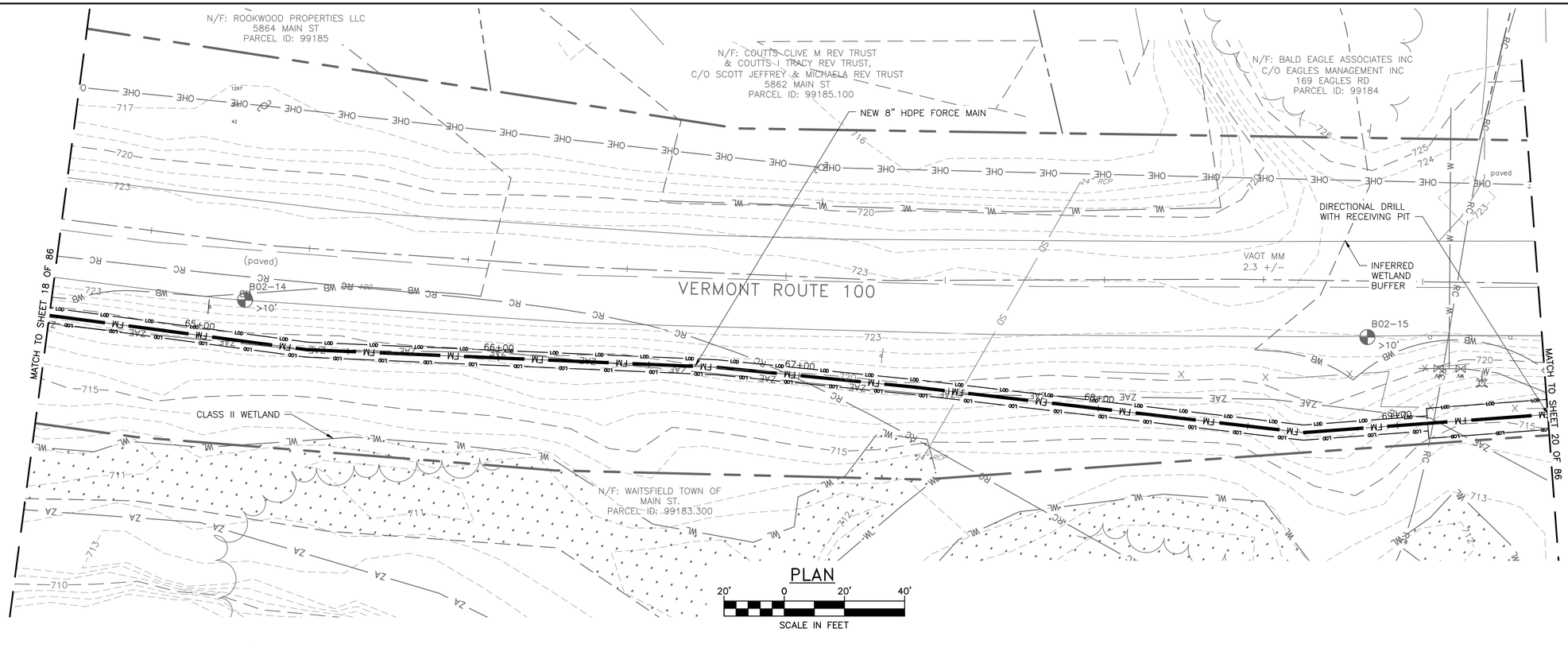

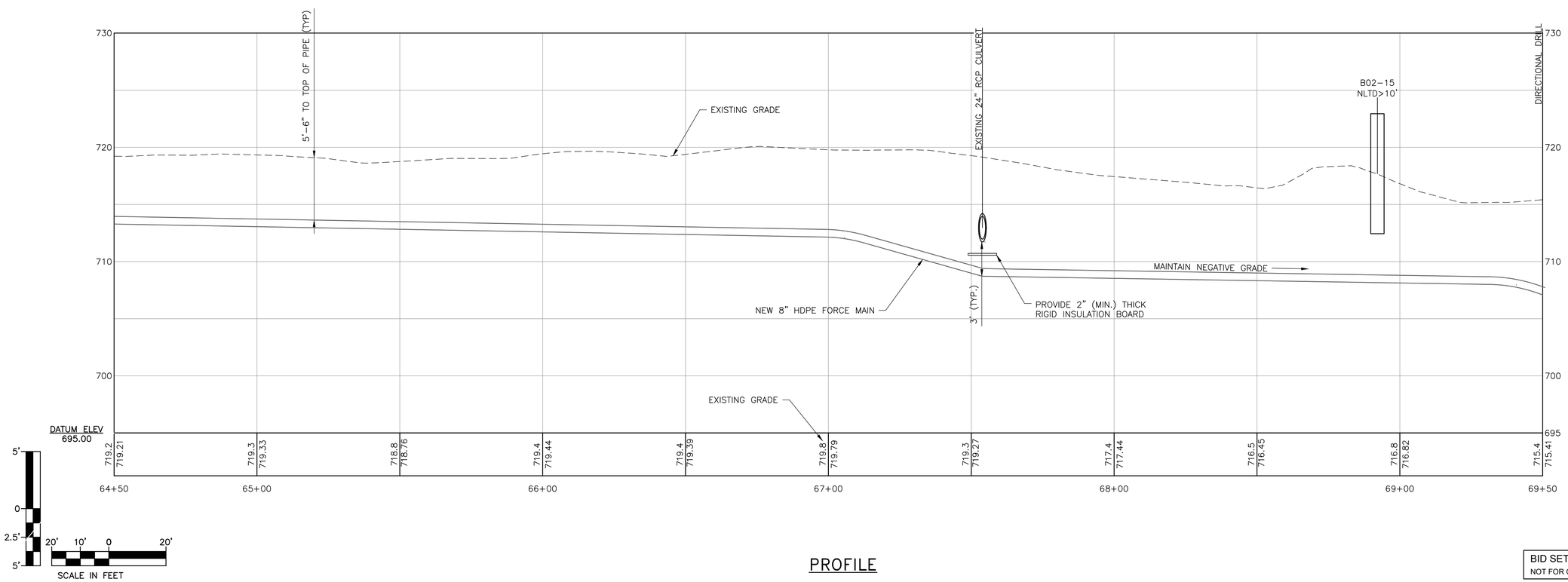

PROFILE

BID SET
NOT FOR CONSTRUCTION 7/16/2026

DuBois & King inc.
www.dubois-king.com
© Copyright 2026 DuBois & King inc.

STATE OF VERMONT
ASHLEY E. BRUNO
PROFESSIONAL ENGINEER
07-16-2026
BID SET
NOT FOR CONSTRUCTION

REVISIONS

NUMBER	DATE	REVISION DESCRIPTION	BY

CLIENT NAME
TOWN OF WAITSFIELD

PROJECT NAME
WAITSFIELD COMMUNITY WASTEWATER SYSTEM

PROJECT ADDRESS
4144 MAIN STREET
WAITSFIELD, VERMONT 05673

SHEET TITLE
CONTRACT NO. 2
PLAN AND PROFILE

STA 64+50 - 69+50

D&K PROJECT #	PROJ. ENG.
227947	JBA
DRAWN BY	CHECKED BY
EBS	DDC

DATE
JULY 2026

SHEET NUMBER
C14

SHEET: 19 of 86

I:\21\227947 Waitsfield Water and Wastewater Feasibility Stud\Drawings\Civil\Sheet Breakouts\227947-BDR-10-20.dwg 8/27/2026 10:36 AM

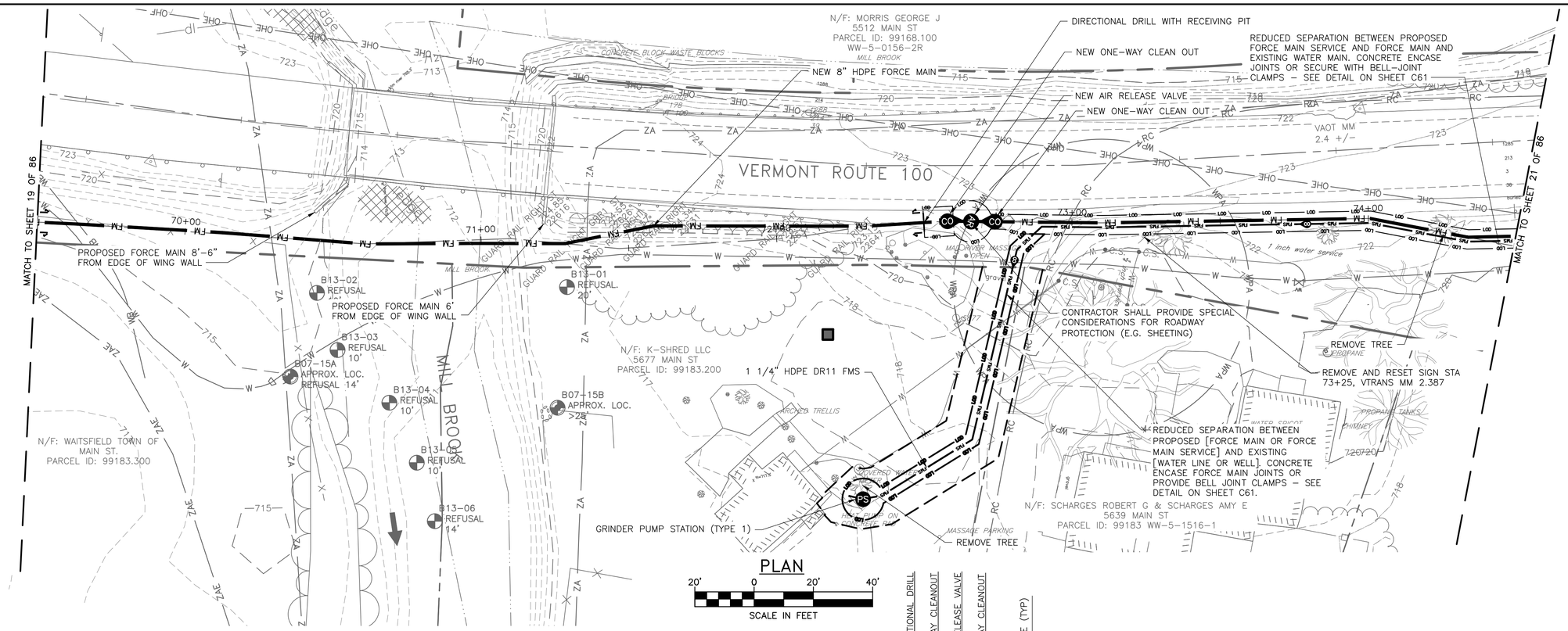

PLAN

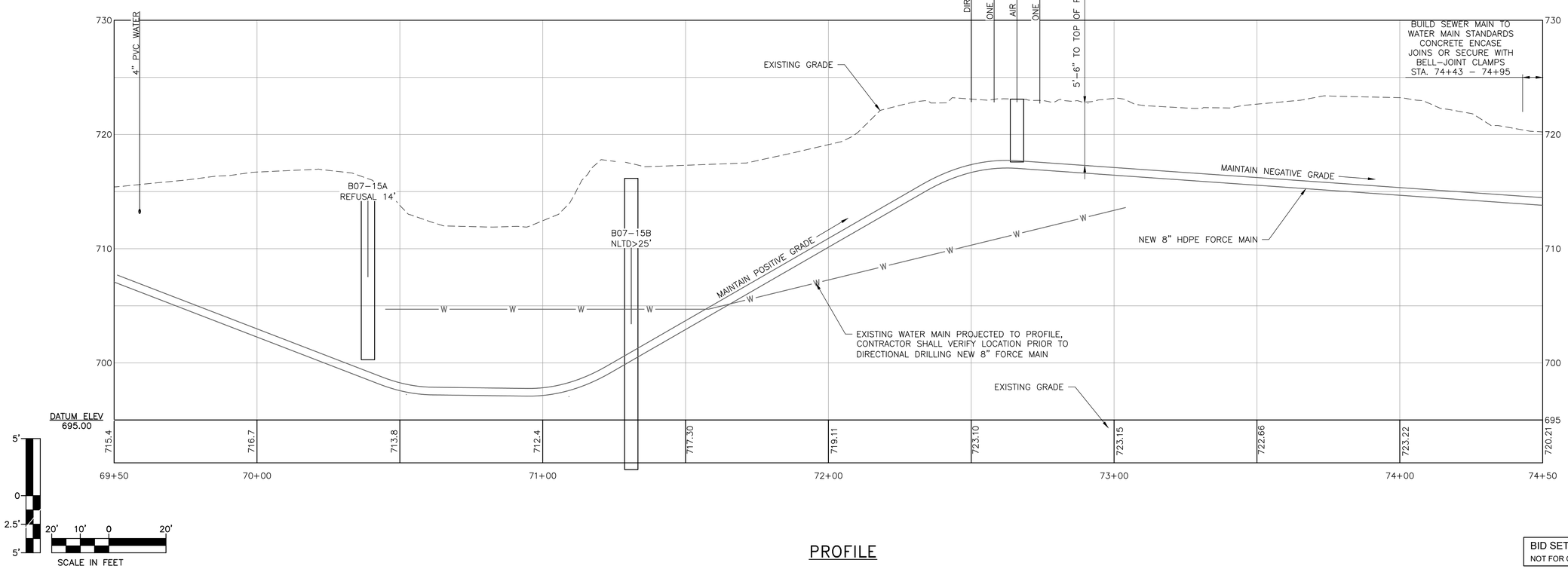

PROFILE

BID SET
NOT FOR CONSTRUCTION 7/16/2026

DuBois & King inc.
www.dubois-king.com
© Copyright 2026 DuBois & King inc.

STATE OF VERMONT
DAVID B. KING
No. 9000
PROFESSIONAL ENGINEER
07-16-2026
BID SET
NOT FOR CONSTRUCTION

REVISIONS

NUMBER	DATE	REVISION DESCRIPTION	BY

CLIENT NAME
TOWN OF WAITSFIELD

PROJECT NAME
WAITSFIELD COMMUNITY WASTEWATER SYSTEM

PROJECT ADDRESS
4144 MAIN STREET
WAITSFIELD, VERMONT 05673

SHEET TITLE
CONTRACT NO. 2
PLAN AND PROFILE

STA 69+50 - 74+50

D&K PROJECT #	PROJ. ENG.
227947	JBA
DRAWN BY	CHECKED BY
EBS	DDC

DATE
JULY 2026

SHEET NUMBER
C15

I:\2\227947 Waitsfield Water and Wastewater Feasibility Stud\Drawings\Civil\Sheet Breakouts\227947-BDR-10-20.dwg 8/27/2026 10:37 AM

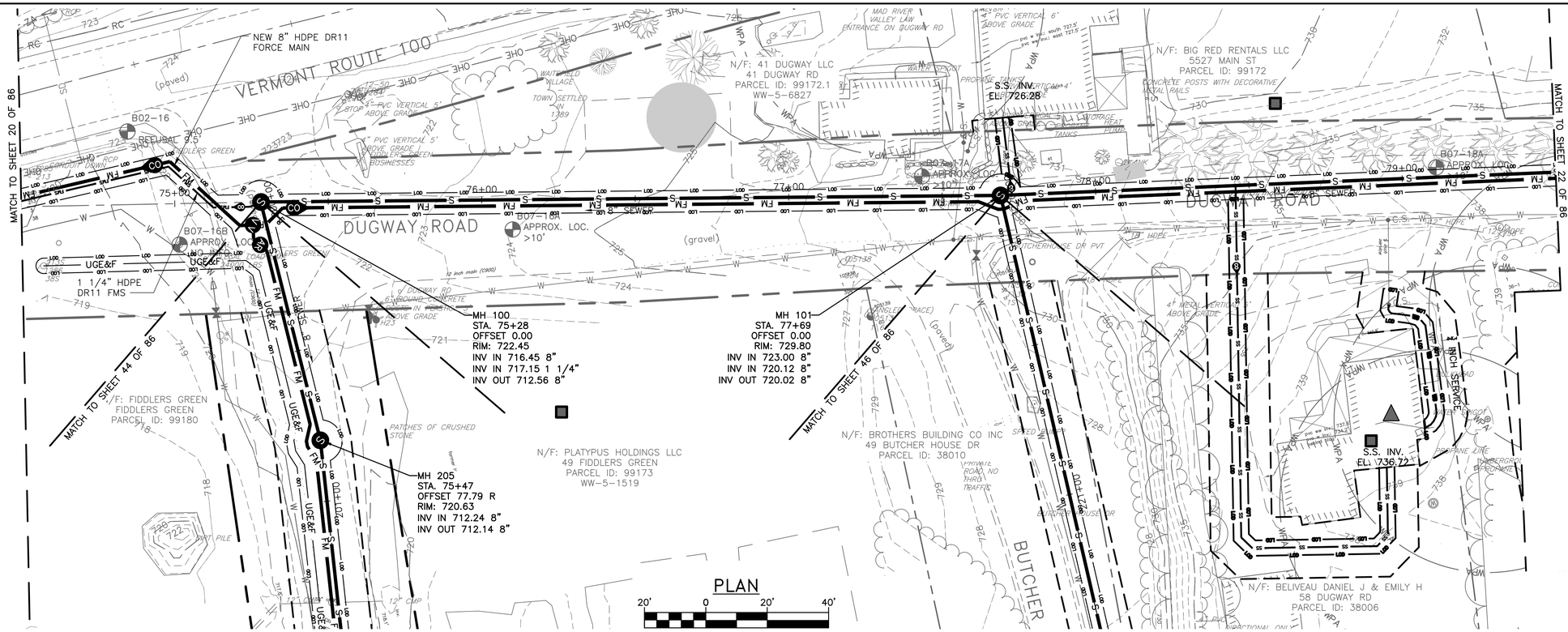

PLAN

20' 0 20' 40'

SCALE IN FEET

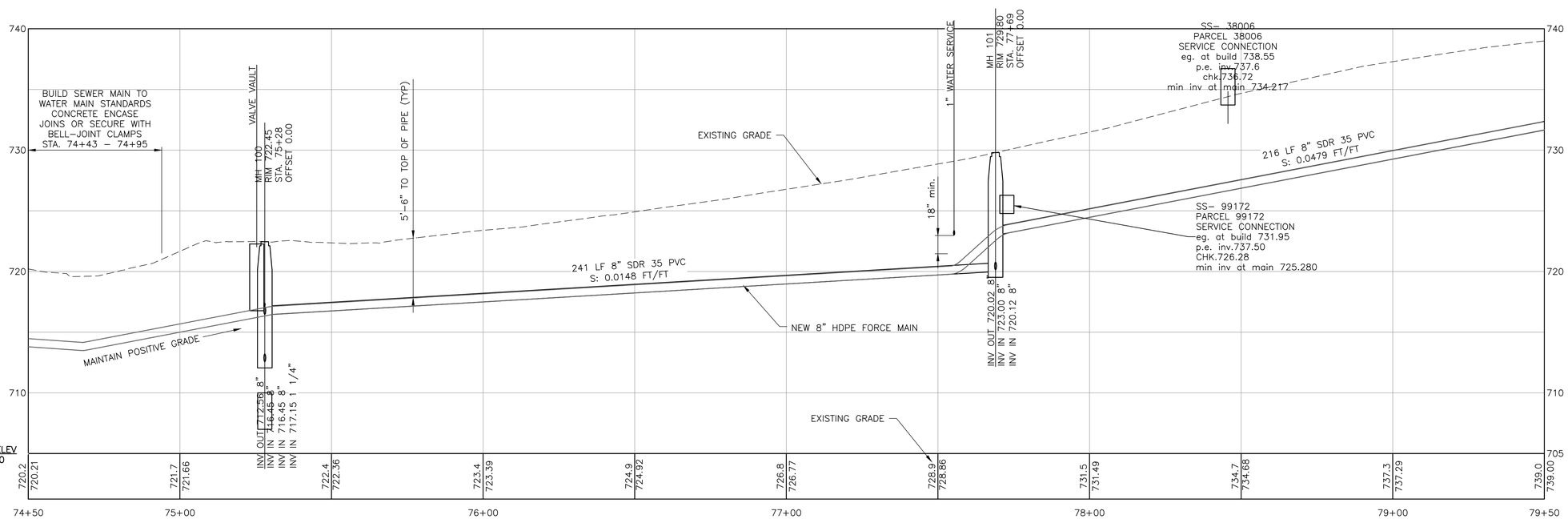

5' 0 2.5' 5'

20' 10' 0 20'

SCALE IN FEET

PROFILE

BID SET
NOT FOR CONSTRUCTION 7/16/2026

DuBois & King inc.

www.dubois-king.com

© Copyright 2026 DuBois & King inc.

STATE OF VERMONT
DAVID A. SHEE
No. 8
PROFESSIONAL ENGINEER
07-16-2026

BID SET
NOT FOR CONSTRUCTION

REVISIONS

NUMBER	DATE	REVISION DESCRIPTION	BY

CLIENT NAME
TOWN OF WAITSFIELD

PROJECT NAME
WAITSFIELD COMMUNITY WASTEWATER SYSTEM

PROJECT ADDRESS
4144 MAIN STREET
WAITSFIELD, VERMONT 05673

SHEET TITLE
CONTRACT NO. 2
PLAN AND PROFILE

STA 74+50 - 79+50

D&K PROJECT #	PROJ. ENG.
227947	JBA
DRAWN BY	CHECKED BY
EBS	DDC

DATE
JULY 2026

SHEET NUMBER
C16

SHEET: 21 of 86

I:\21\227947 Waitsfield Water and Wastewater Feasibility Stud\Drawings\Civil\Sheet Breakouts\227947-BDR-10-20.dwg 8/27/2026 10:38 AM

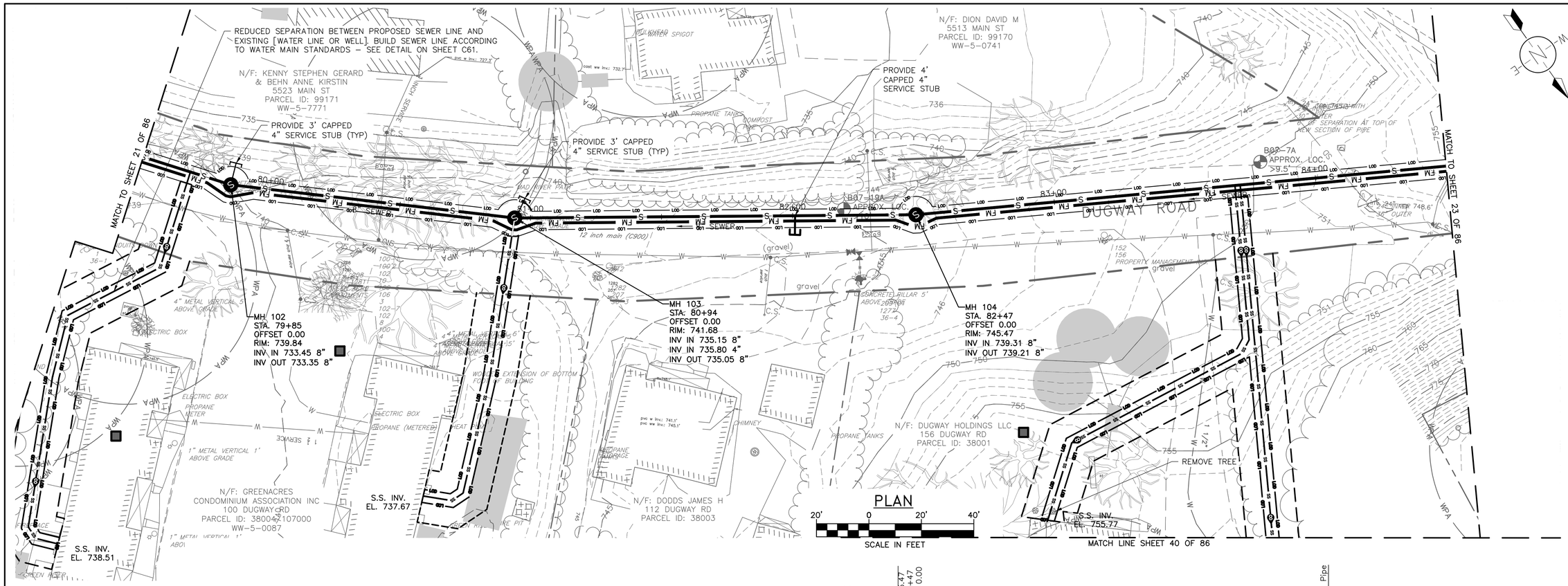

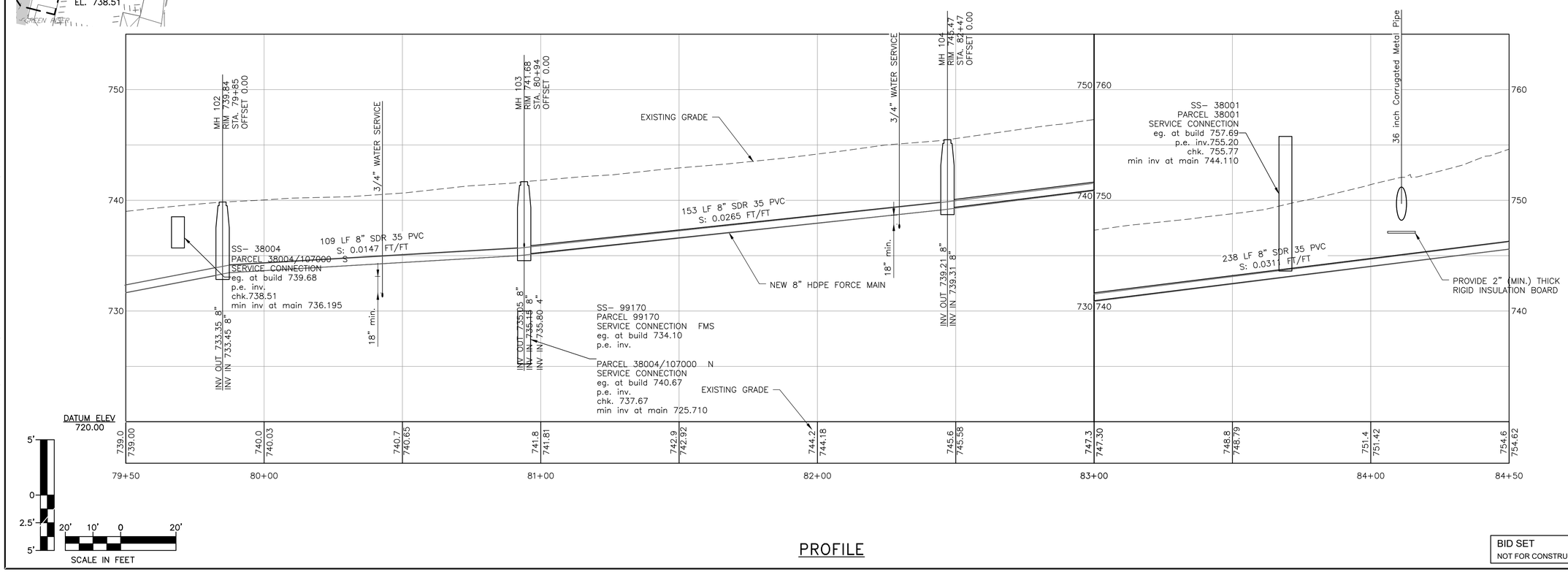

PROFILE

BID SET
NOT FOR CONSTRUCTION 7/16/2026

DuBois & King inc.
www.dubois-king.com
© Copyright 2026 DuBois & King inc.

STATE OF VERMONT
ASHLEY R. BOSCO
PROFESSIONAL ENGINEER
07-16-2026

BID SET
NOT FOR CONSTRUCTION

REVISIONS

NUMBER	DATE	REVISION DESCRIPTION	BY

CLIENT NAME
TOWN OF WAITSFIELD

PROJECT NAME
WAITSFIELD COMMUNITY WASTEWATER SYSTEM

PROJECT ADDRESS
4144 MAIN STREET
WAITSFIELD, VERMONT 05673

SHEET TITLE
CONTRACT NO. 2
PLAN AND PROFILE

STA 79+50 - 84+50

D&K PROJECT #	PROJ. ENG.
227947	JBA
DRAWN BY	CHECKED BY
EBS	DDC

DATE
JULY 2026

SHEET NUMBER
C17

SHEET: 22 of 86

I:\2\227947 Waitsfield Water and Wastewater Feasibility Stud\Drawings\Civil\Sheet Breakouts\227947-BDR-10-20.dwg 8/27/2026 10:39 AM

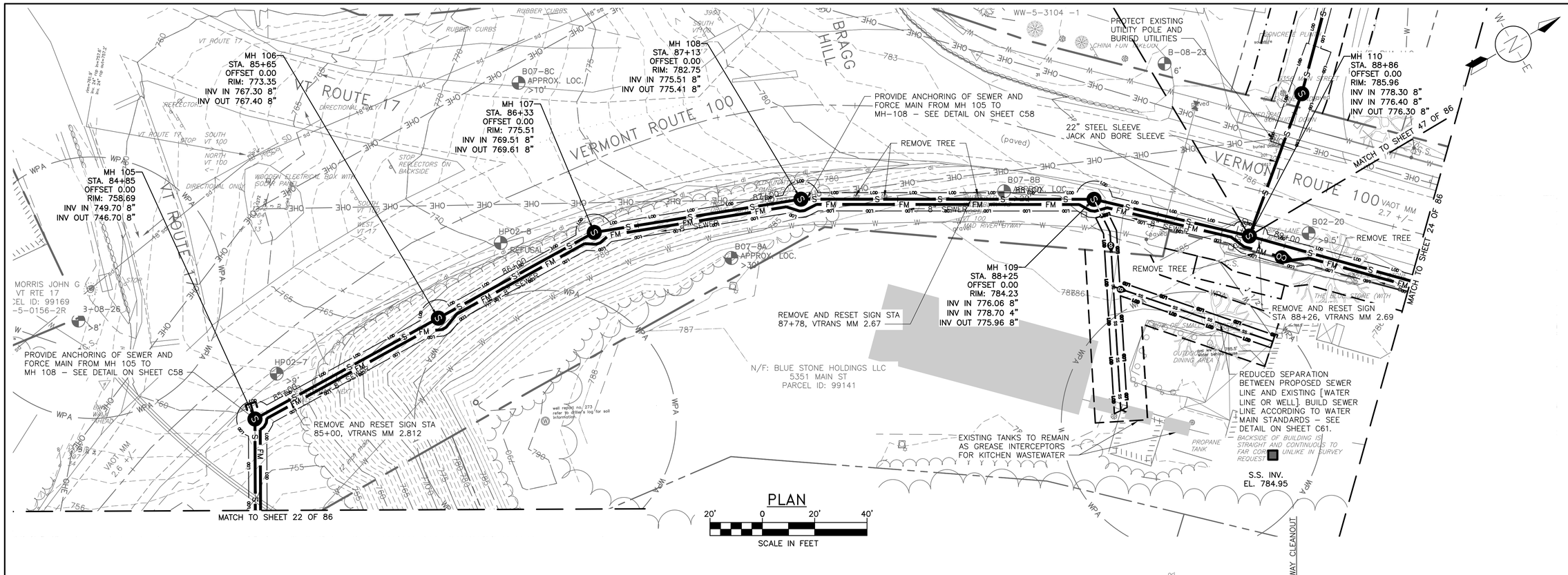

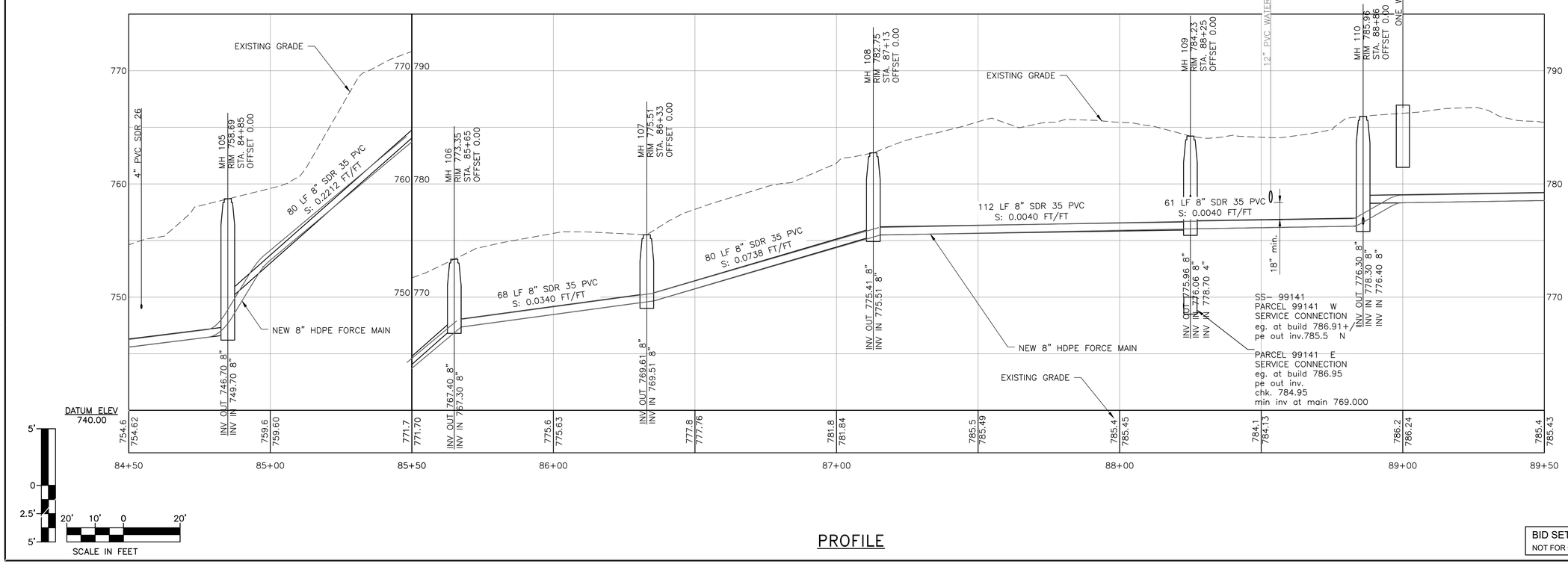

BID SET
NOT FOR CONSTRUCTION 7/16/2026

DuBois & King inc.
www.dubois-king.com
© Copyright 2026 DuBois & King inc.

STATE OF VERMONT
BID SET
NOT FOR CONSTRUCTION
07-16-2026

REVISIONS

NUMBER	DATE	REVISION DESCRIPTION	BY

CLIENT NAME
TOWN OF WAITSFIELD

PROJECT NAME
WAITSFIELD COMMUNITY WASTEWATER SYSTEM

PROJECT ADDRESS
4144 MAIN STREET
WAITSFIELD, VERMONT 05673

SHEET TITLE
CONTRACT NO. 2
PLAN AND PROFILE

STA 84+50 - 89+50

D&K PROJECT #	PROJ. ENG.
227947	JBA
DRAWN BY	CHECKED BY
EBS	DDC

DATE
JULY 2026

SHEET NUMBER
C18

SHEET: 23 of 86

I:\21\227947 Waitsfield Water and Wastewater Feasibility Stud\Drawings\Civil\Sheet Breakouts\227947-BDR-10-20.dwg 8/27/2026 10:40 AM

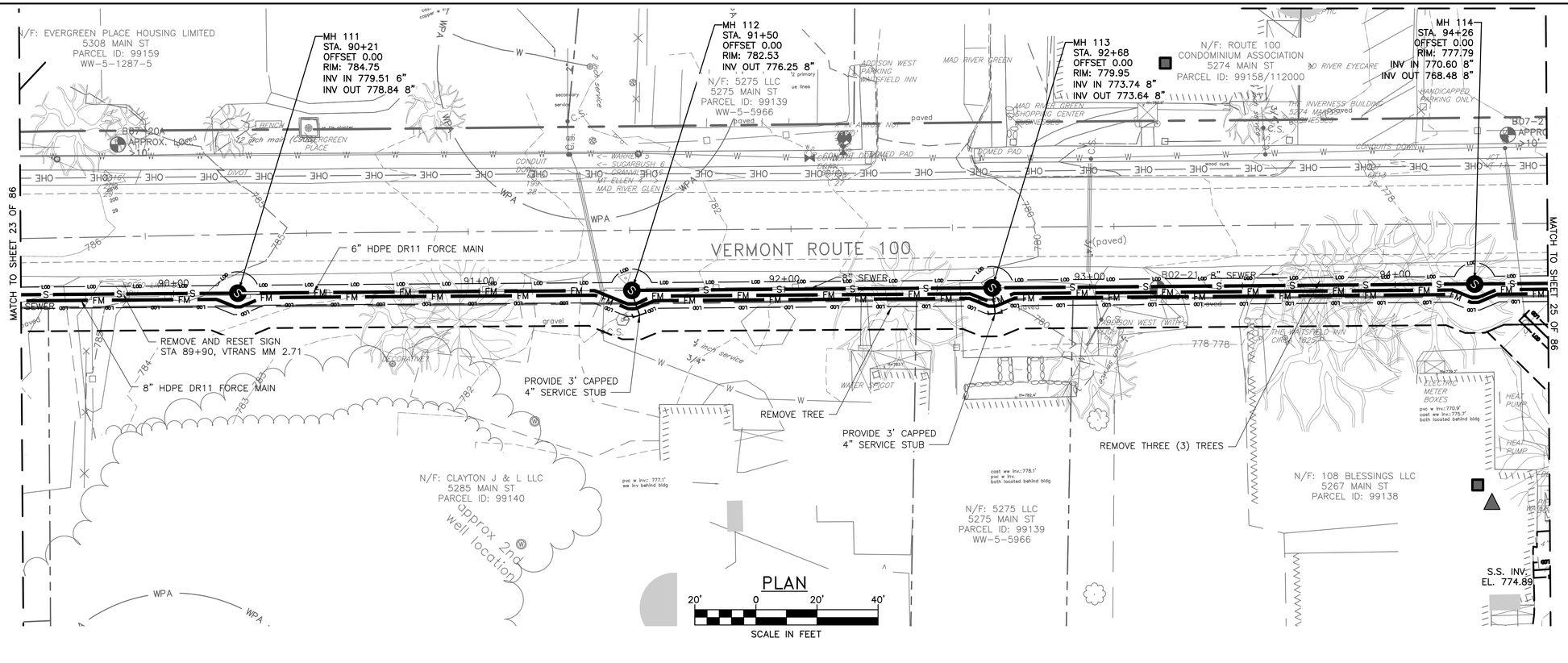

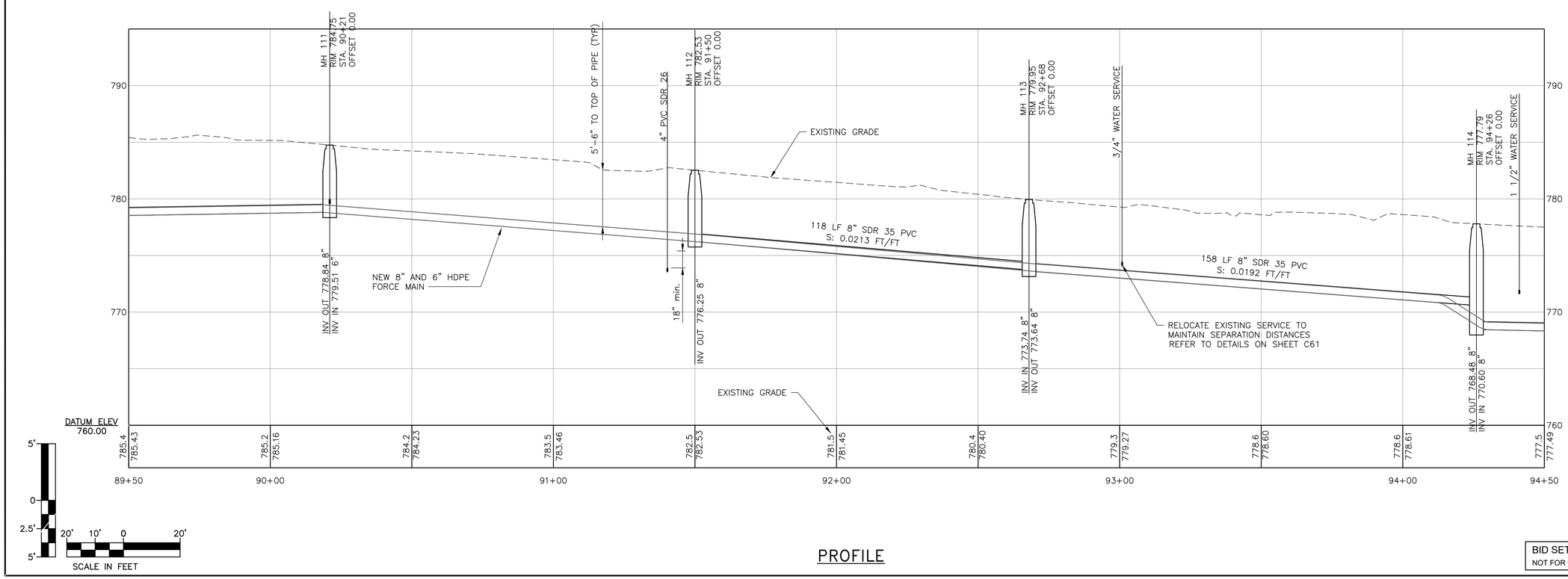

PROFILE

BID SET
NOT FOR CONSTRUCTION 7/16/2026

DuBois & King inc.
www.dubois-king.com
© Copyright 2026 DuBois & King inc.

STATE OF VERMONT
DAVID B. ASHLEY
PROFESSIONAL ENGINEER
07-16-2026
BID SET
NOT FOR
CONSTRUCTION

REVISIONS

NUMBER	DATE	REVISION DESCRIPTION	BY

CLIENT NAME
TOWN OF
WAITSFIELD

PROJECT NAME
WAITSFIELD
COMMUNITY
WASTEWATER
SYSTEM

PROJECT ADDRESS
4144 MAIN STREET
WAITSFIELD, VERMONT 05673

SHEET TITLE
CONTRACT NO. 2
PLAN AND PROFILE

STA 89+50 - 94+50

D&K PROJECT #	PROJ. ENG.
227947	JBA
DRAWN BY	CHECKED BY
EBS	DDC

DATE
JULY 2026

SHEET NUMBER
C19

SHEET: 24 of 86

I:\21\227947 Waitsfield Water and Wastewater Feasibility Stud\Drawings\Civil\Sheet Breakouts\227947-BDR-10-20.dwg 8/27/2026 10:41 AM

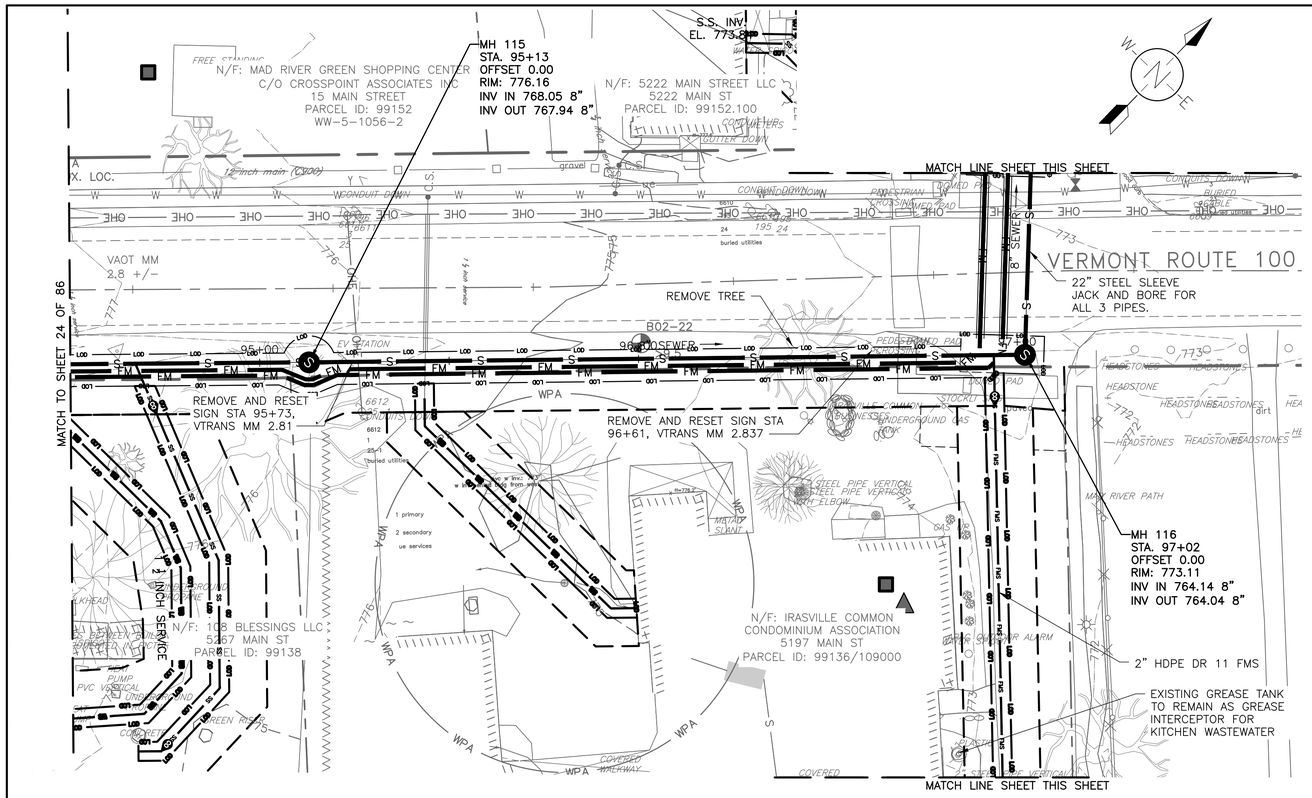

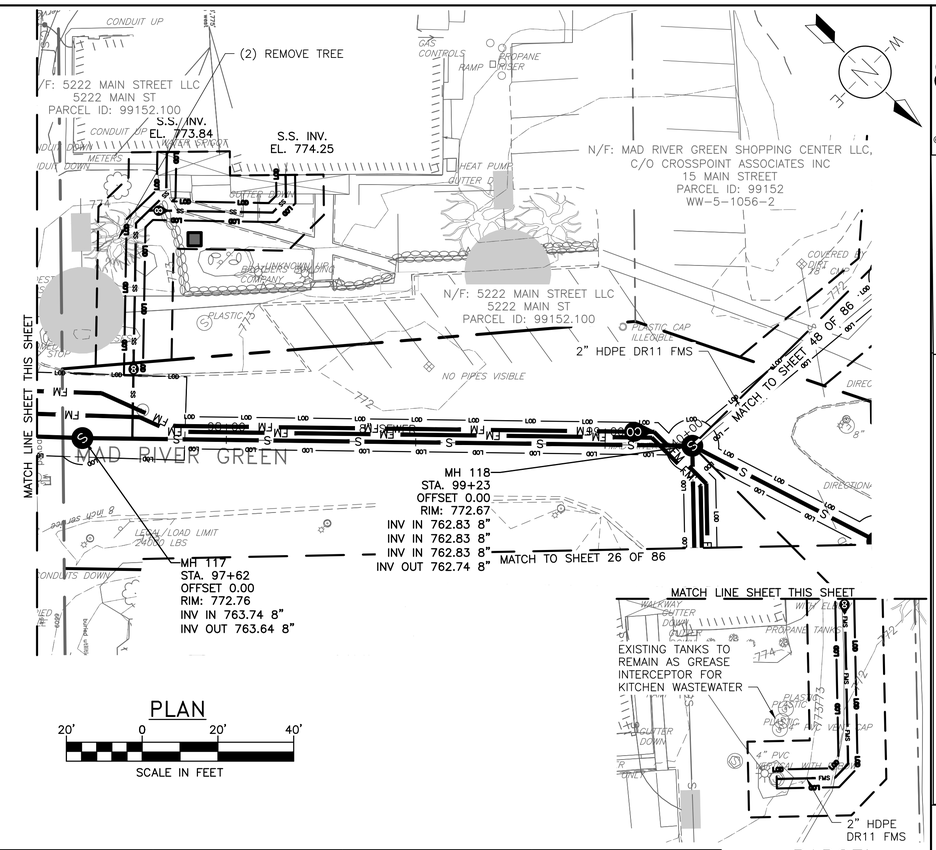

PLAN

20' 0 20' 40'

SCALE IN FEET

PARCEL
99136/109000
SERVICE

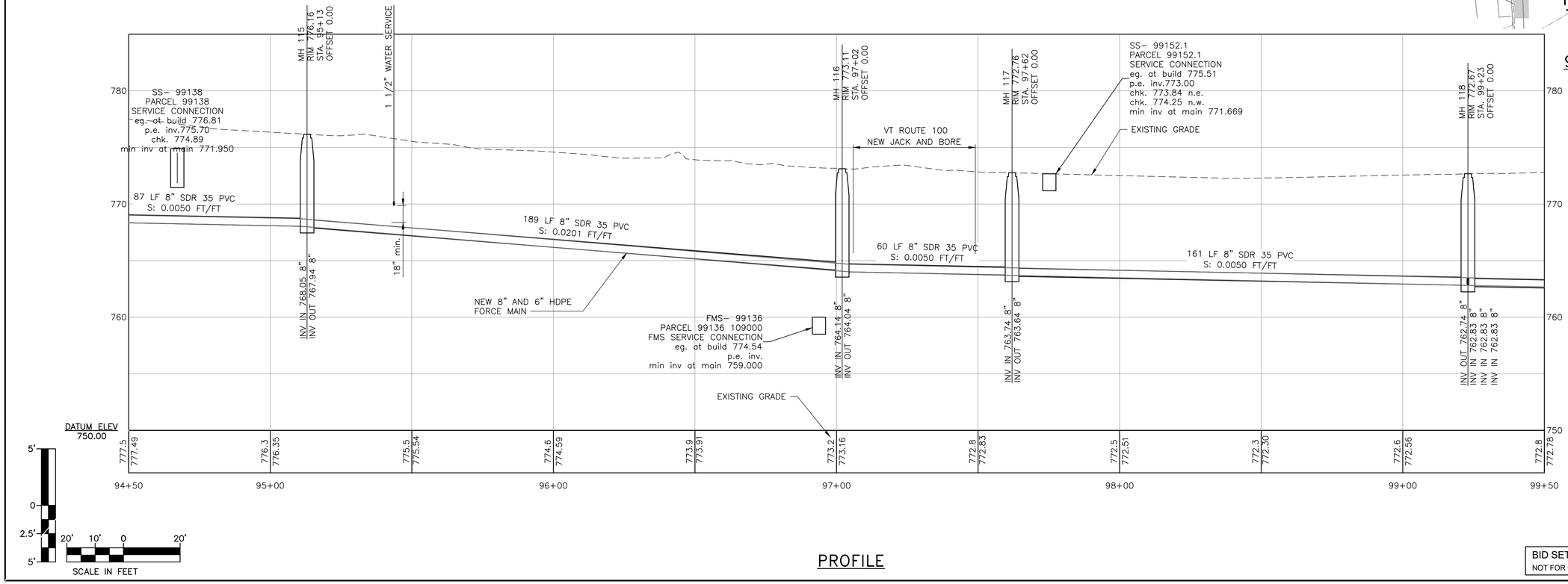

5' 0 2.5' 5'

20' 10' 0 20'

SCALE IN FEET

PROFILE

BID SET
NOT FOR CONSTRUCTION 7/16/2026

DuBois & King inc.

www.dubois-king.com

© Copyright 2026 DuBois & King inc.

STATE OF VERMONT
DAVID A. SHEE
No. 9000
PROFESSIONAL ENGINEER
07-16-2026

BID SET
NOT FOR
CONSTRUCTION

REVISIONS				
NUMBER	DATE	REVISION DESCRIPTION	BY	

CLIENT NAME
TOWN OF
WAITSFIELD

PROJECT NAME
WAITSFIELD
COMMUNITY
WASTEWATER
SYSTEM

PROJECT ADDRESS
4144 MAIN STREET
WAITSFIELD, VERMONT 05673

SHEET TITLE
CONTRACT NO. 2
PLAN AND PROFILE

STA 94+50 - 99+50

D&K PROJECT #	PROJ. ENG.
227947	JBA
DRAWN BY	CHECKED BY
EBS	DDC

DATE
JULY 2026

SHEET NUMBER
C20

SHEET: 25 of 86

I:\2\227947 Waitsfield Water and Wastewater Feasibility Stud\Drawings\Civil\Sheet Breakouts\227947-BDR-10-20.dwg 8/27/2026 10:43 AM

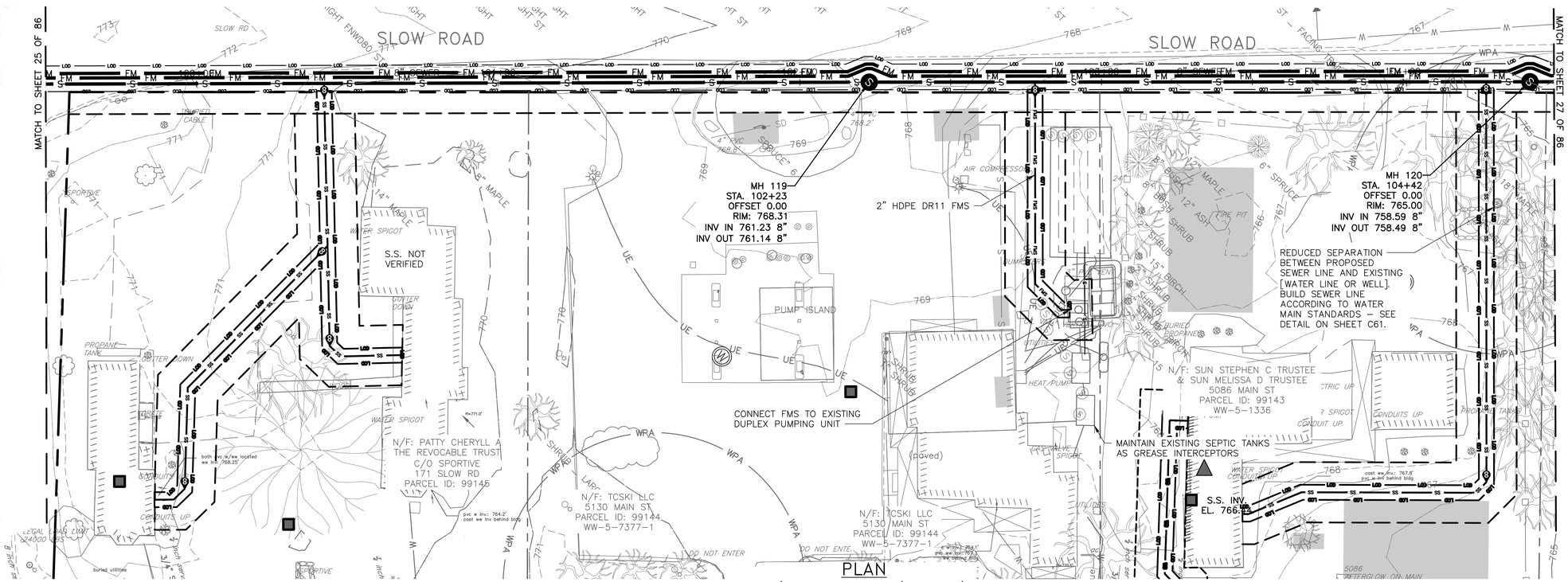

PLAN

20' 0 20' 40'

SCALE IN FEET

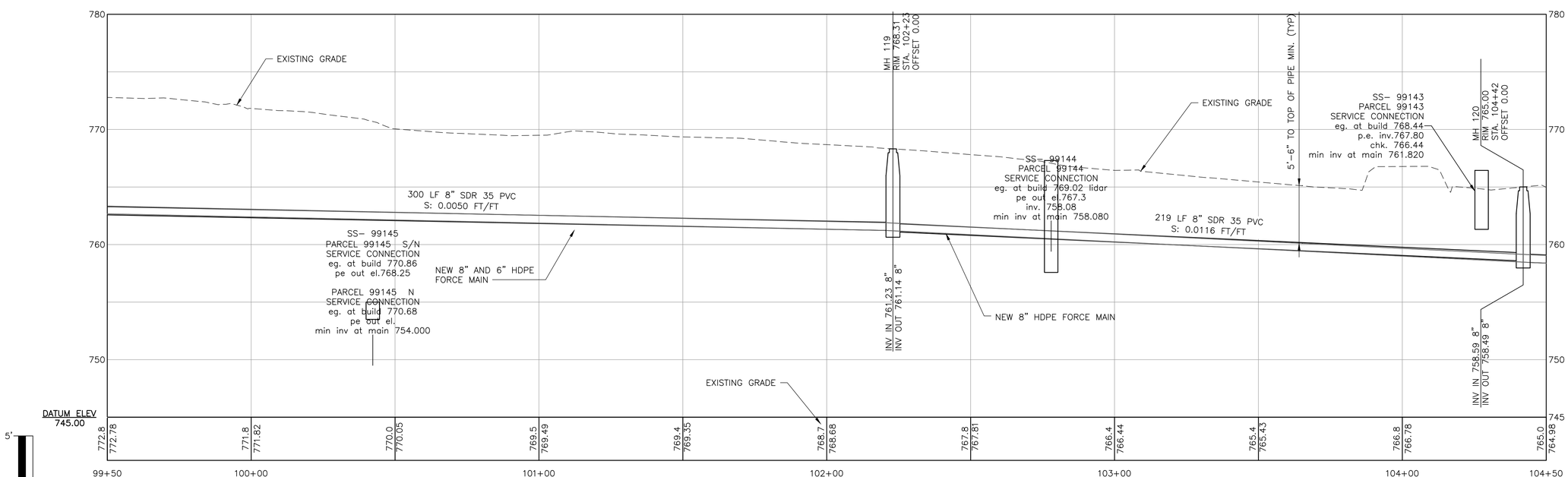

5' 0 2.5' 5'

20' 10' 0 20'

SCALE IN FEET

PROFILE

BID SET
NOT FOR CONSTRUCTION 7/16/2026

DuBois & King inc.

www.dubois-king.com

© Copyright 2026 DuBois & King inc.

STATE OF VERMONT
DAVID A. SHEE
PROFESSIONAL ENGINEER
07-16-2026

BID SET
NOT FOR CONSTRUCTION

REVISIONS			
NUMBER	DATE	REVISION DESCRIPTION	BY

CLIENT NAME
TOWN OF WAITSFIELD

PROJECT NAME
WAITSFIELD COMMUNITY WASTEWATER SYSTEM

PROJECT ADDRESS
4144 MAIN STREET
WAITSFIELD, VERMONT 05673

SHEET TITLE
CONTRACT NO. 2
PLAN AND PROFILE

STA 99+50 - 104+50

D&K PROJECT #	PROJ. ENG.
227947	JBA
DRAWN BY	CHECKED BY
EBS	DDC

DATE
JULY 2026

SHEET NUMBER
C21

SHEET: 26 of 86

I:\21\227947 Waitsfield Water and Wastewater Feasibility Stud\Drawings\Civil\Sheet Breakouts\227947-BDR-20-30.dwg 8/27/2026 10:46 AM

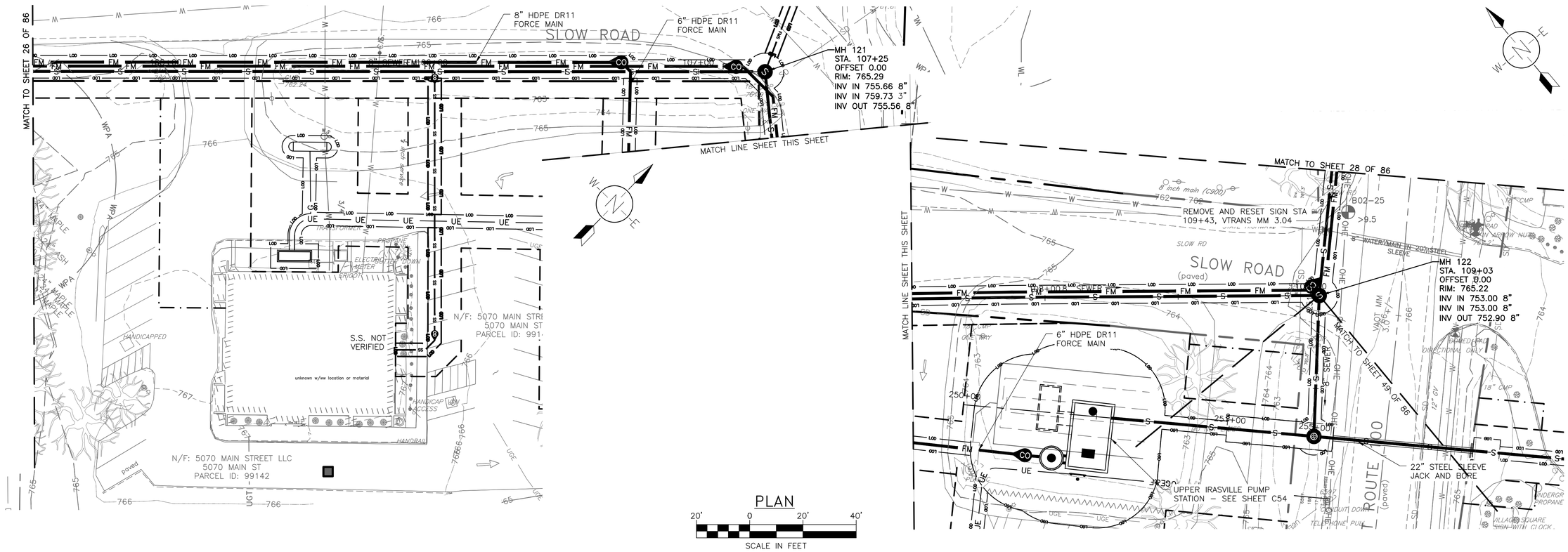

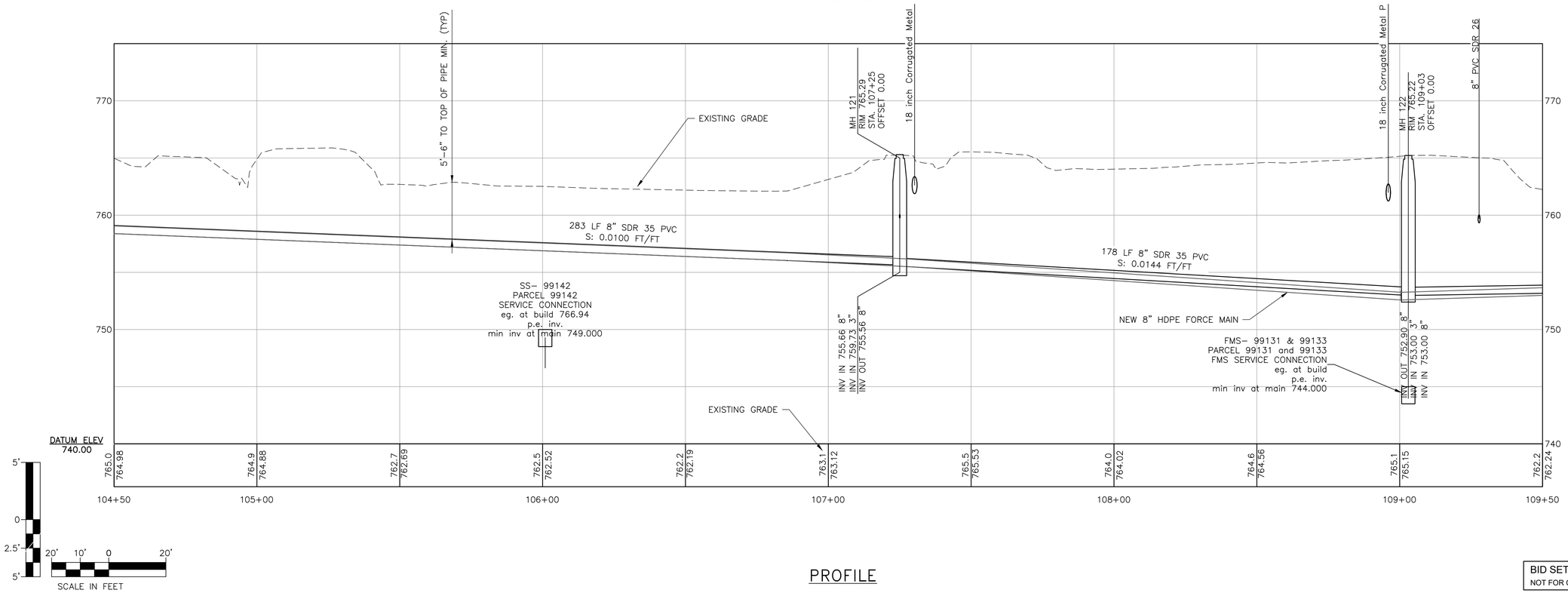

PROFILE

BID SET
NOT FOR CONSTRUCTION 7/16/2026

DuBois & King inc.
www.dubois-king.com
© Copyright 2026 DuBois & King inc.

STATE OF VERMONT
BID SET
NOT FOR CONSTRUCTION
07-16-2026

REVISIONS

NUMBER	DATE	REVISION DESCRIPTION	BY

CLIENT NAME
TOWN OF WAITSFIELD

PROJECT NAME
WAITSFIELD COMMUNITY WASTEWATER SYSTEM

PROJECT ADDRESS
4144 MAIN STREET
WAITSFIELD, VERMONT 05673

SHEET TITLE
CONTRACT NO. 2
PLAN AND PROFILE

STA 104+50 - 109+50

D&K PROJECT #	PROJ. ENG.
227947	JBA
DRAWN BY	CHECKED BY
EBS	DDC

DATE
JULY 2026

SHEET NUMBER
C22

SHEET: 27 of 86

I:\2\227947 Waitsfield Water and Wastewater Feasibility Stud\Drawings\Civil\Sheet Breakouts\227947-bdr-20-30.dwg 8/27/2026 10:50 AM

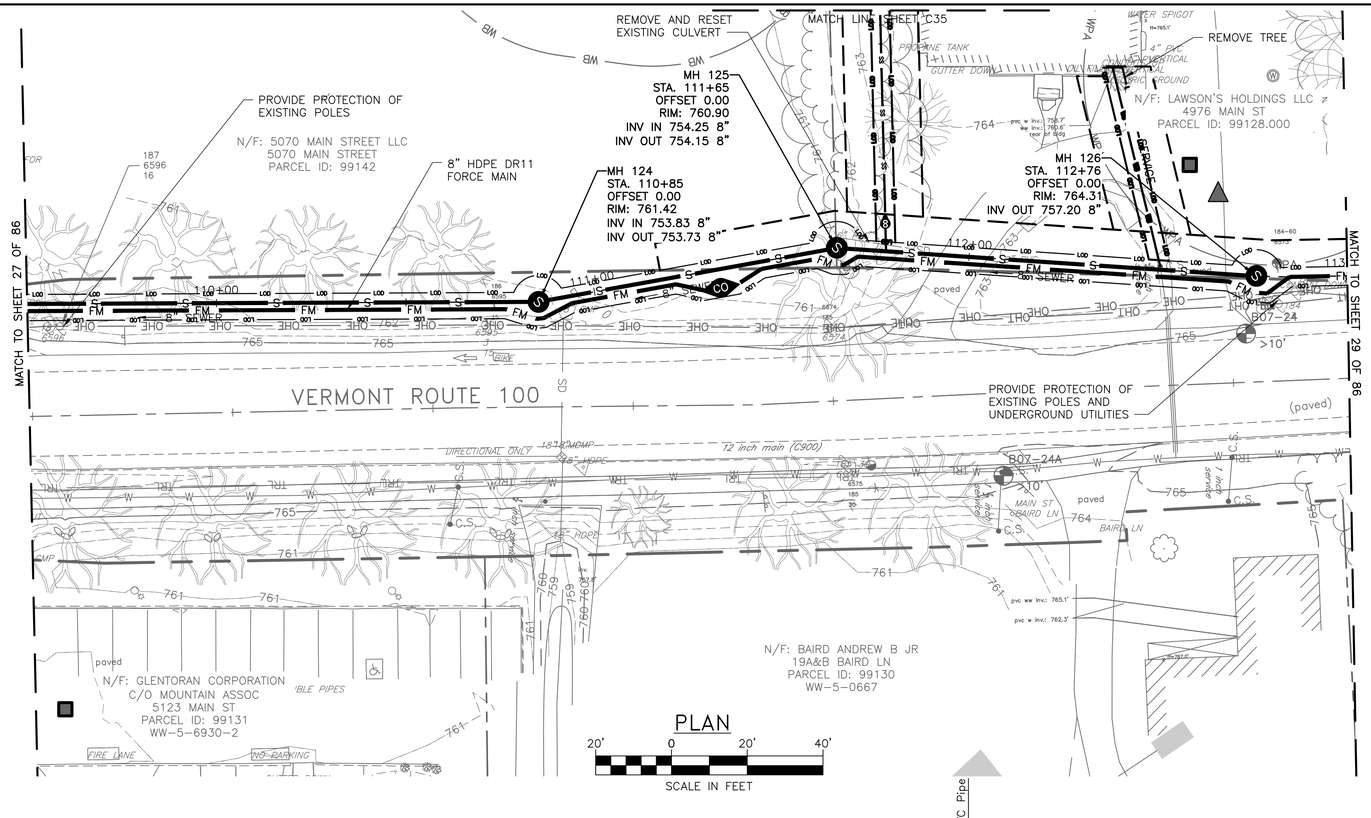

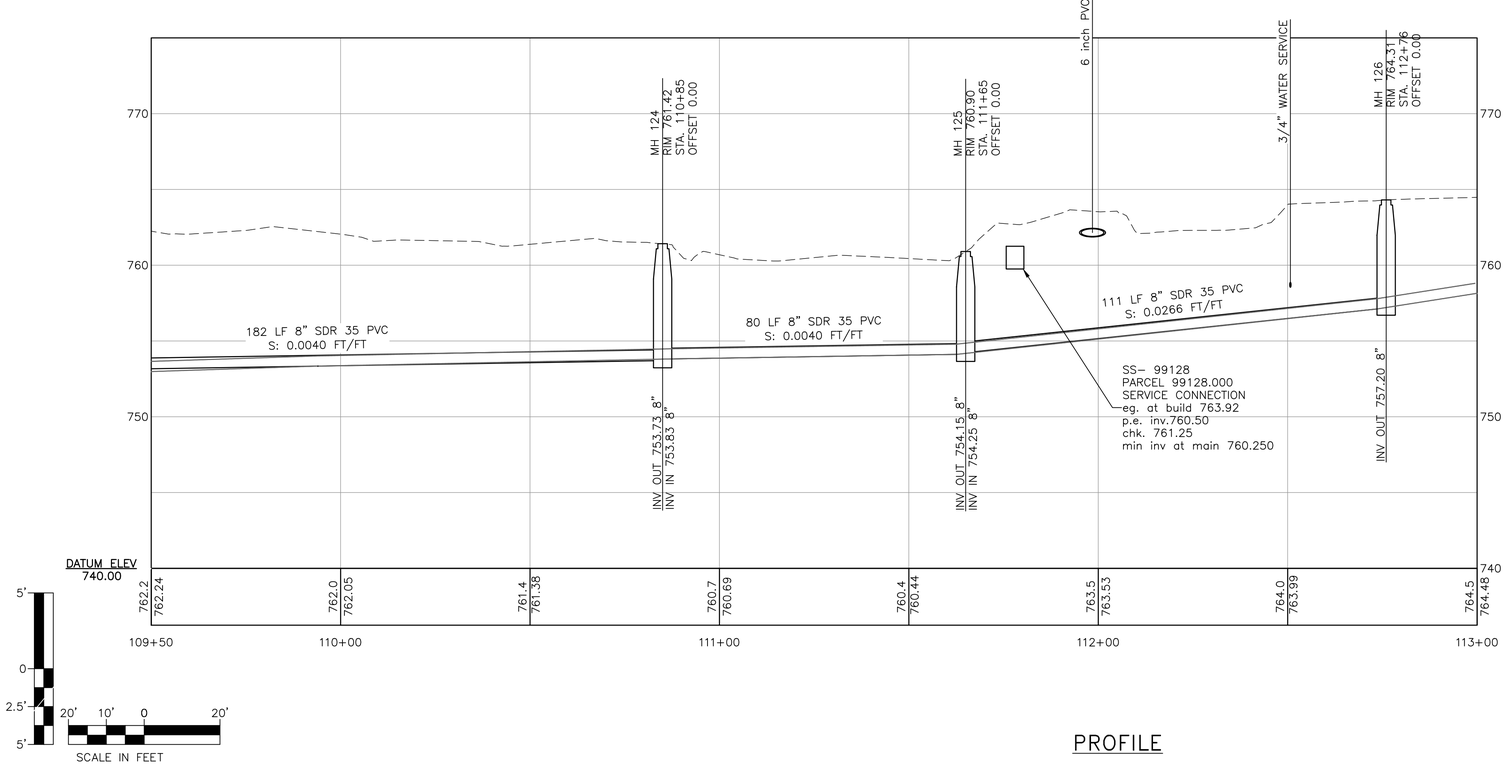

PROFILE

BID SET
NOT FOR CONSTRUCTION 7/16/2026

DuBois & King inc.
www.dubois-king.com
© Copyright 2026 DuBois & King inc.

STATE OF VERMONT
BID SET
NOT FOR CONSTRUCTION
07-16-2026

REVISIONS

NUMBER	DATE	REVISION DESCRIPTION	BY

CLIENT NAME
TOWN OF WAITSFIELD

PROJECT NAME
WAITSFIELD COMMUNITY WASTEWATER SYSTEM

PROJECT ADDRESS
4144 MAIN STREET
WAITSFIELD, VERMONT 05673

SHEET TITLE
CONTRACT NO. 2
PLAN AND PROFILE

STA 109+50 - 113+00

D&K PROJECT #	PROJ. ENG.
227947	JBA
DRAWN BY	CHECKED BY
EBS	DDC

DATE
JULY 2026

SHEET NUMBER
C23

SHEET: 28 of 86

I:\2\227947 Waitsfield Water and Wastewater Feasibility Stud\Drawings\Civil\Sheet Breakouts\227947-BDR-20-30.dwg 8/27/2026 10:54 AM

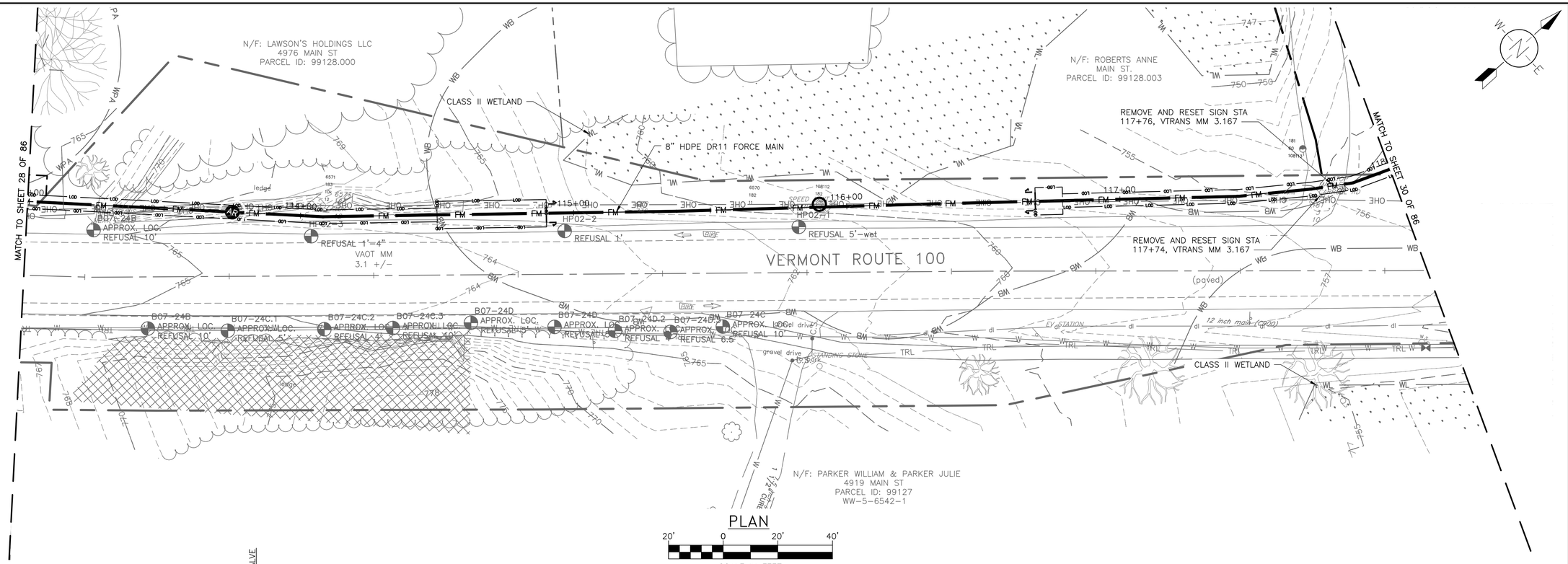

PLAN

20' 0 20' 40'

SCALE IN FEET

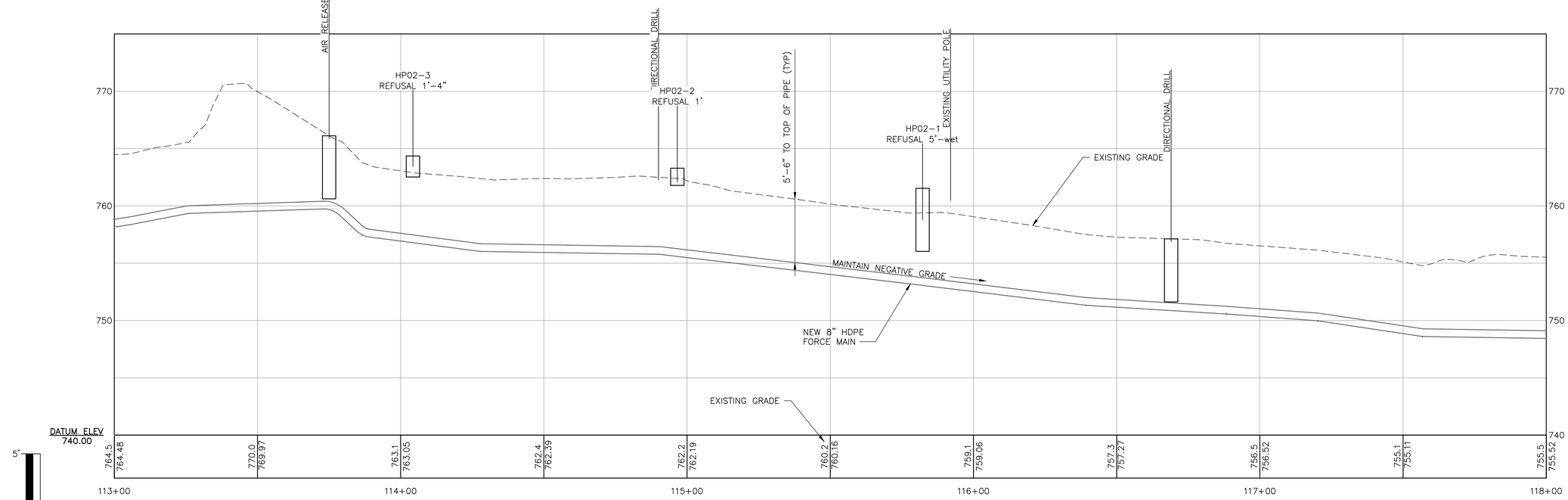

5' 0 2.5' 5'

20' 10' 0 20'

SCALE IN FEET

PROFILE

BID SET
NOT FOR CONSTRUCTION 7/16/2026

DuBois & King inc.

www.dubois-king.com

© Copyright 2026 DuBois & King inc.

STATE OF VERMONT
DAVID B. ASHLEY
PROFESSIONAL ENGINEER
07-16-2026

BID SET
NOT FOR
CONSTRUCTION

REVISIONS

NUMBER	DATE	REVISION DESCRIPTION	BY

CLIENT NAME
TOWN OF
WAITSFIELD

PROJECT NAME
WAITSFIELD
COMMUNITY
WASTEWATER
SYSTEM

PROJECT ADDRESS
4144 MAIN STREET
WAITSFIELD, VERMONT 05673

SHEET TITLE
CONTRACT NO. 2
PLAN AND PROFILE

STA 113+00 - 118+00

D&K PROJECT #	PROJ. ENG.
227947	JBA
DRAWN BY	CHECKED BY
EBS	DDC

DATE
JULY 2026

SHEET NUMBER
C24

SHEET: 29 of 86

I:\2\227947 Waitsfield Water and Wastewater Feasibility Stud\Drawings\Civil\Sheet Breakouts\227947-BDR-20-30.dwg 8/27/2026 10:55 AM

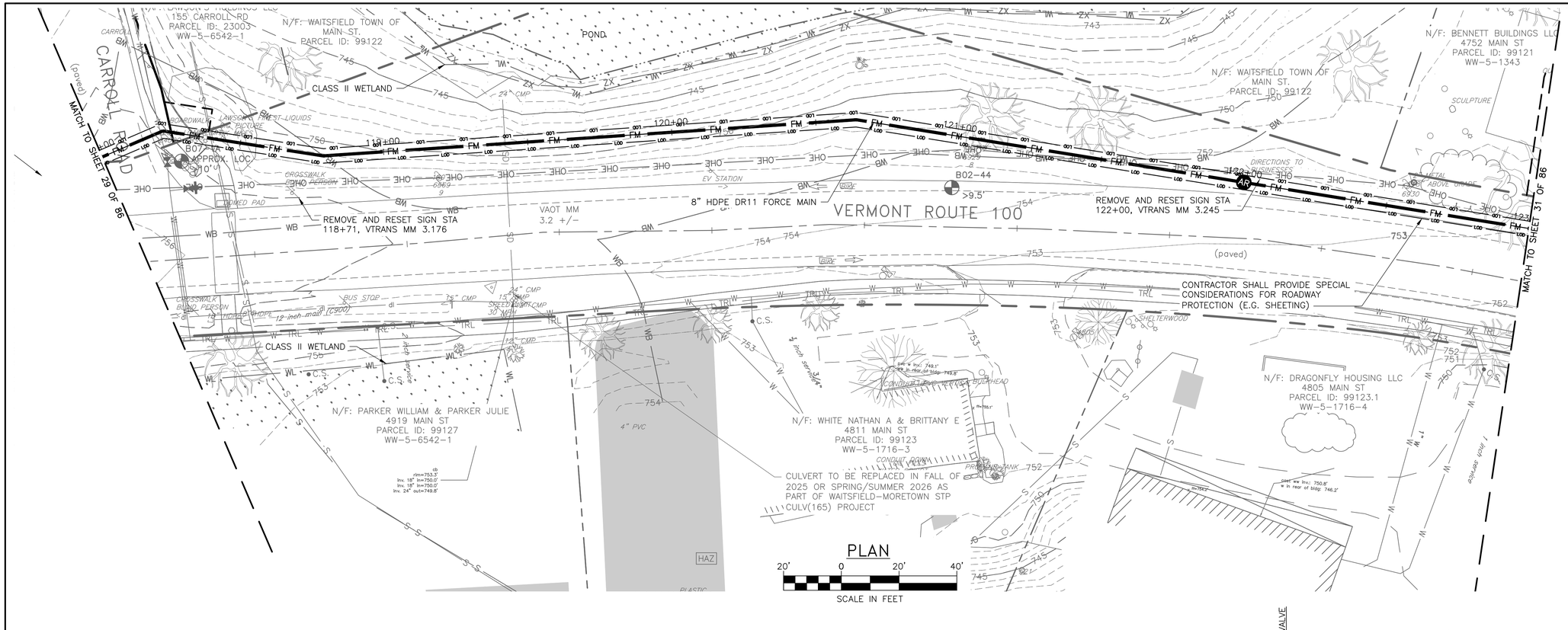

PLAN

20' 0 20' 40'

SCALE IN FEET

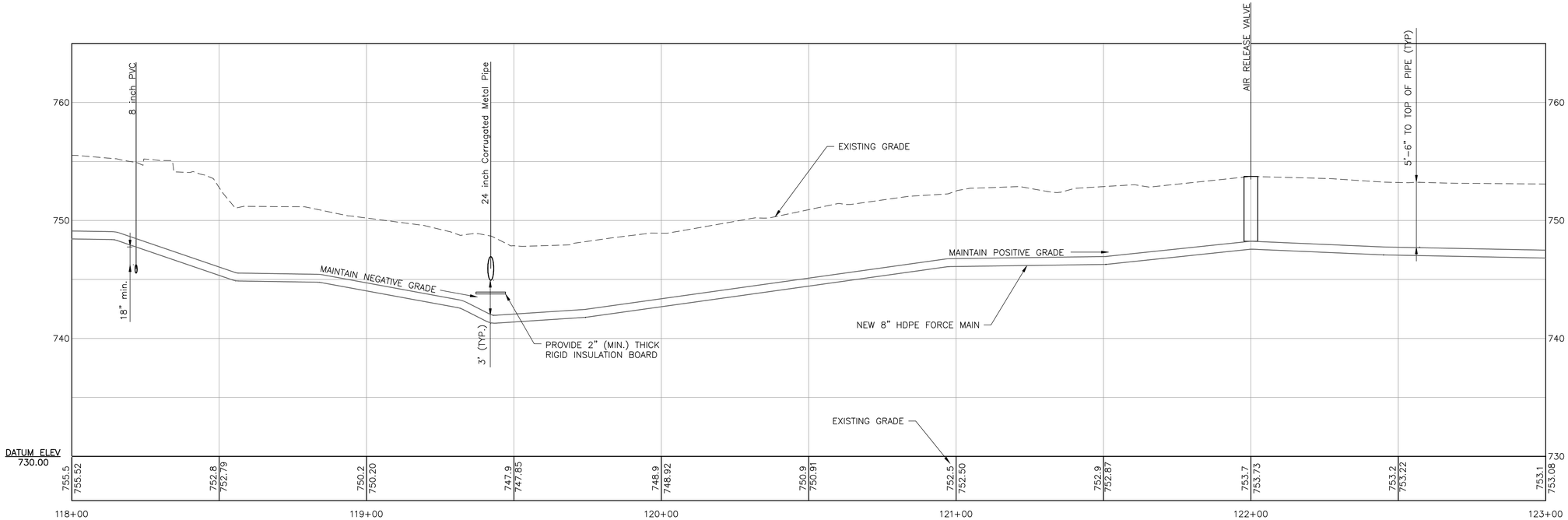

5' 0 2.5' 5'

20' 10' 0 20'

SCALE IN FEET

PROFILE

BID SET
NOT FOR CONSTRUCTION 7/16/2026

DuBois & King inc.

www.dubois-king.com

© Copyright 2026 DuBois & King inc.

STATE OF VERMONT
DAVID C. CHASE
No. 10000
PROFESSIONAL ENGINEER
07-16-2026

BID SET
NOT FOR CONSTRUCTION

REVISIONS			
NUMBER	DATE	REVISION DESCRIPTION	BY

CLIENT NAME
TOWN OF WAITSFIELD

PROJECT NAME
WAITSFIELD COMMUNITY WASTEWATER SYSTEM

PROJECT ADDRESS
4144 MAIN STREET
WAITSFIELD, VERMONT 05673

SHEET TITLE
CONTRACT NO. 2
PLAN AND PROFILE

STA 118+00 - 123+00

D&K PROJECT #	PROJ. ENG.
227947	JBA
DRAWN BY	CHECKED BY
EBS	DDC

DATE
JULY 2026

SHEET NUMBER
C25

SHEET: 30 of 86

I:\2\227947 Waitsfield Water and Wastewater Feasibility Stud\Drawings\Civil\Sheet Breakouts\227947-BDR-20-30.dwg 8/27/2026 10:56 AM

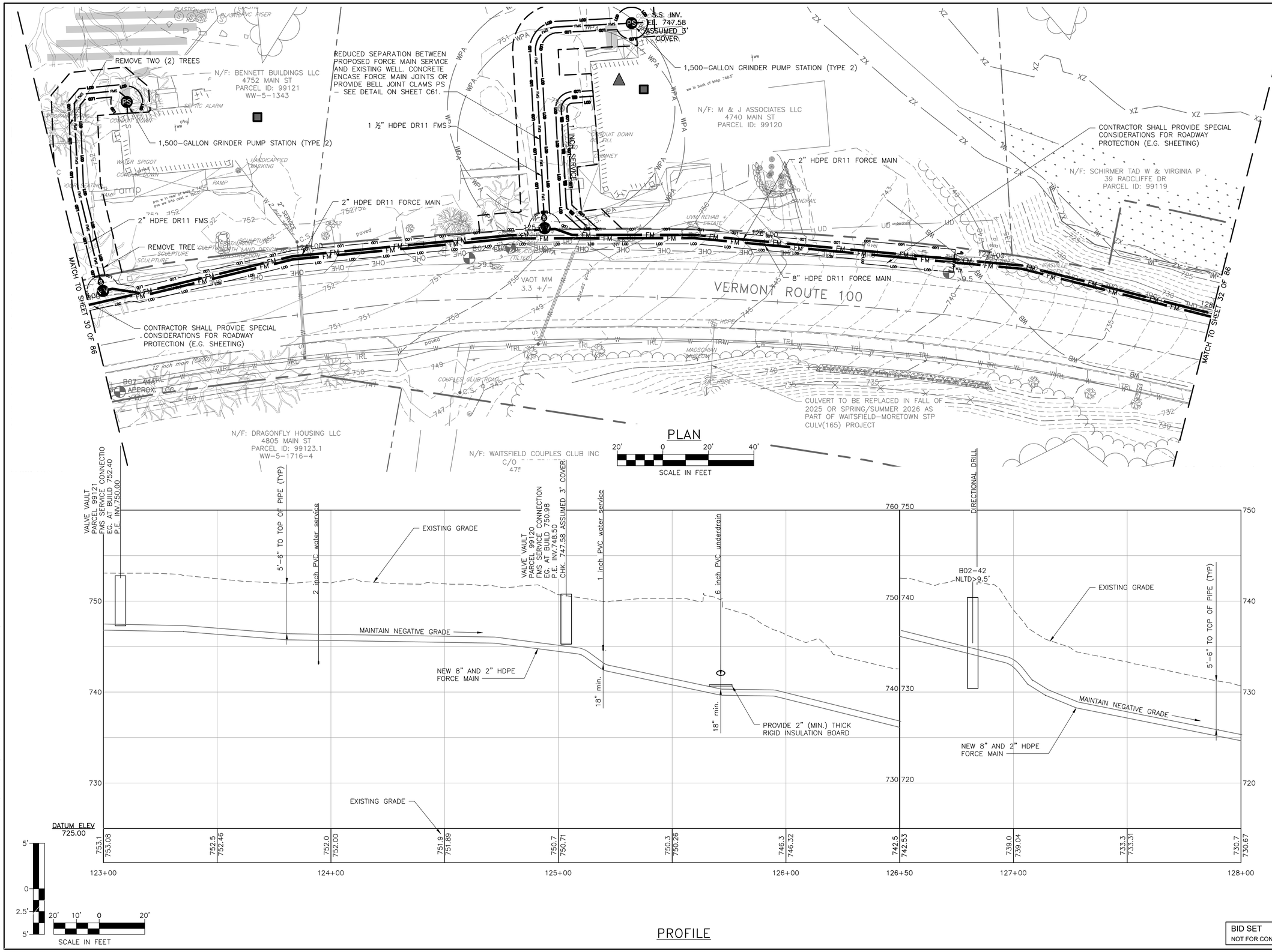

BID SET
NOT FOR CONSTRUCTION 7/16/2026

DuBois & King inc.
www.dubois-king.com
© Copyright 2026 DuBois & King inc.

STATE OF VERMONT
DAVID A. SHEE
No. 9311
PROFESSIONAL ENGINEER
07-16-2026
BID SET
NOT FOR CONSTRUCTION

REVISIONS			
NUMBER	DATE	REVISION DESCRIPTION	BY

CLIENT NAME
TOWN OF WAITSFIELD

PROJECT NAME
WAITSFIELD COMMUNITY WASTEWATER SYSTEM

PROJECT ADDRESS
4144 MAIN STREET
WAITSFIELD, VERMONT 05673

SHEET TITLE
CONTRACT NO. 2
PLAN AND PROFILE

STA 123+00 - 128+00

D&K PROJECT #	PROJ. ENG.
227947	JBA
DRAWN BY	CHECKED BY
EBS	DDC

DATE
JULY 2026

SHEET NUMBER
C26

SHEET: 31 of 86

I:\2\227947 Waitsfield Water and Wastewater Feasibility Stud\Drawings\Civil\Sheet Breakouts\227947-BDR-20-30.dwg 8/27/2026 10:57 AM

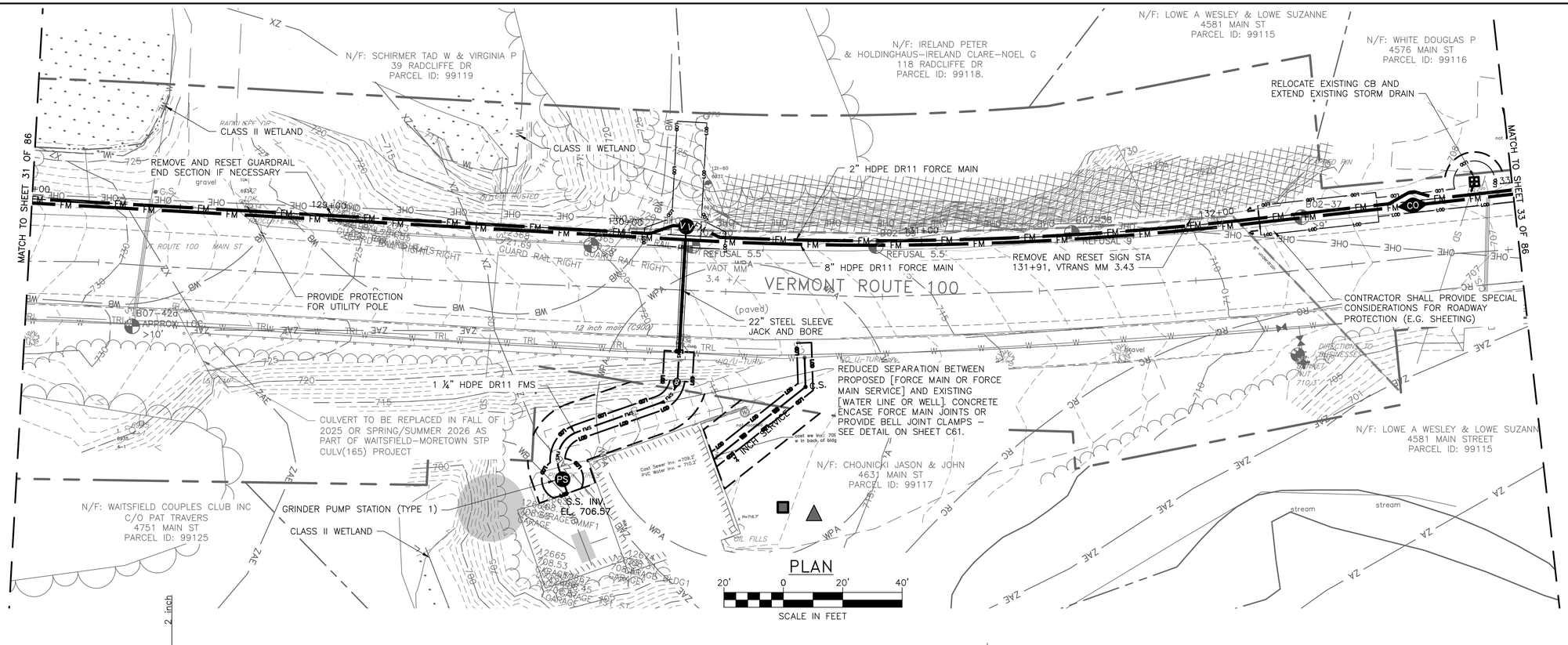

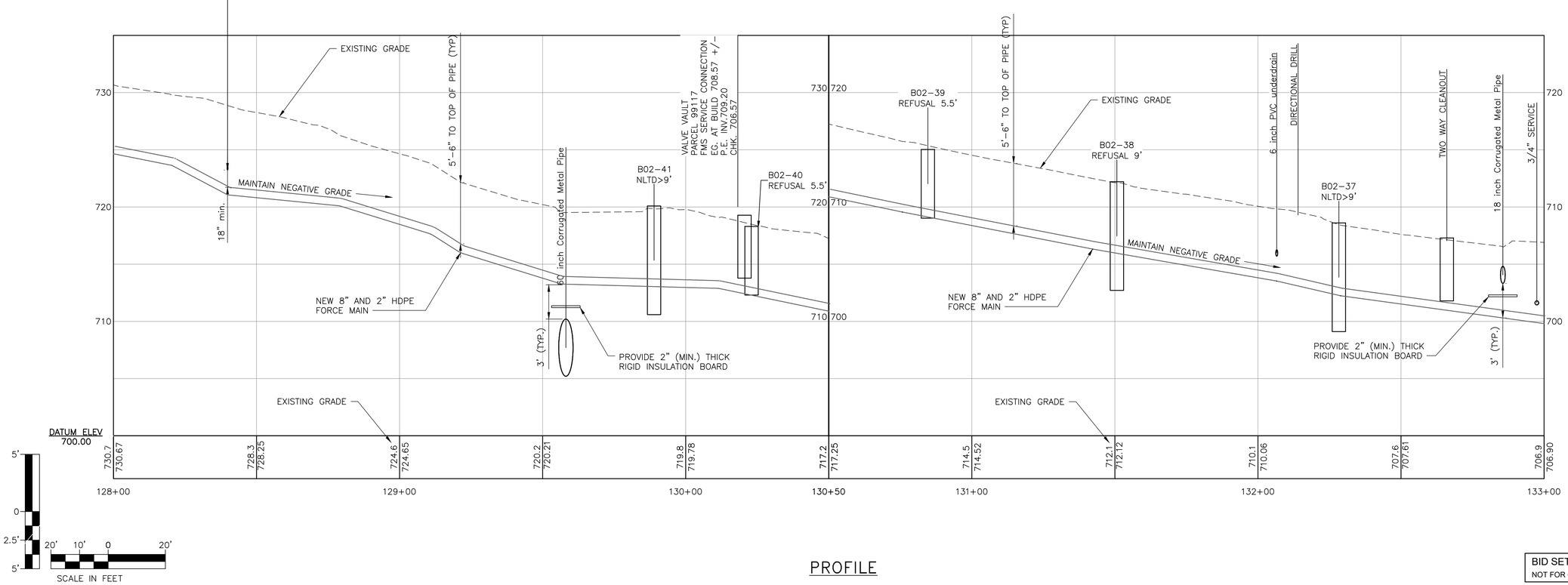

BID SET
NOT FOR CONSTRUCTION 7/16/2026

DuBois & King inc.
www.dubois-king.com
© Copyright 2026 DuBois & King inc.

STATE OF VERMONT
DAVID A. SHEE
No. 9333
PROFESSIONAL ENGINEER
07-16-2026
BID SET
NOT FOR CONSTRUCTION

REVISIONS			
NUMBER	DATE	REVISION DESCRIPTION	BY

CLIENT NAME
TOWN OF WAITSFIELD

PROJECT NAME
WAITSFIELD COMMUNITY WASTEWATER SYSTEM

PROJECT ADDRESS
4144 MAIN STREET
WAITSFIELD, VERMONT 05673

SHEET TITLE
CONTRACT NO. 2
PLAN AND PROFILE

STA 128+00 - 133+00

D&K PROJECT #	PROJ. ENG.
227947	JBA
DRAWN BY	CHECKED BY
EBS	DDC

DATE
JULY 2026

SHEET NUMBER
C27

I:\21\227947 Waitsfield Water and Wastewater Feasibility Stud\Drawings\Civil\Sheet Breakouts\227947-BDR-20-30.dwg 8/27/2026 10:57 AM

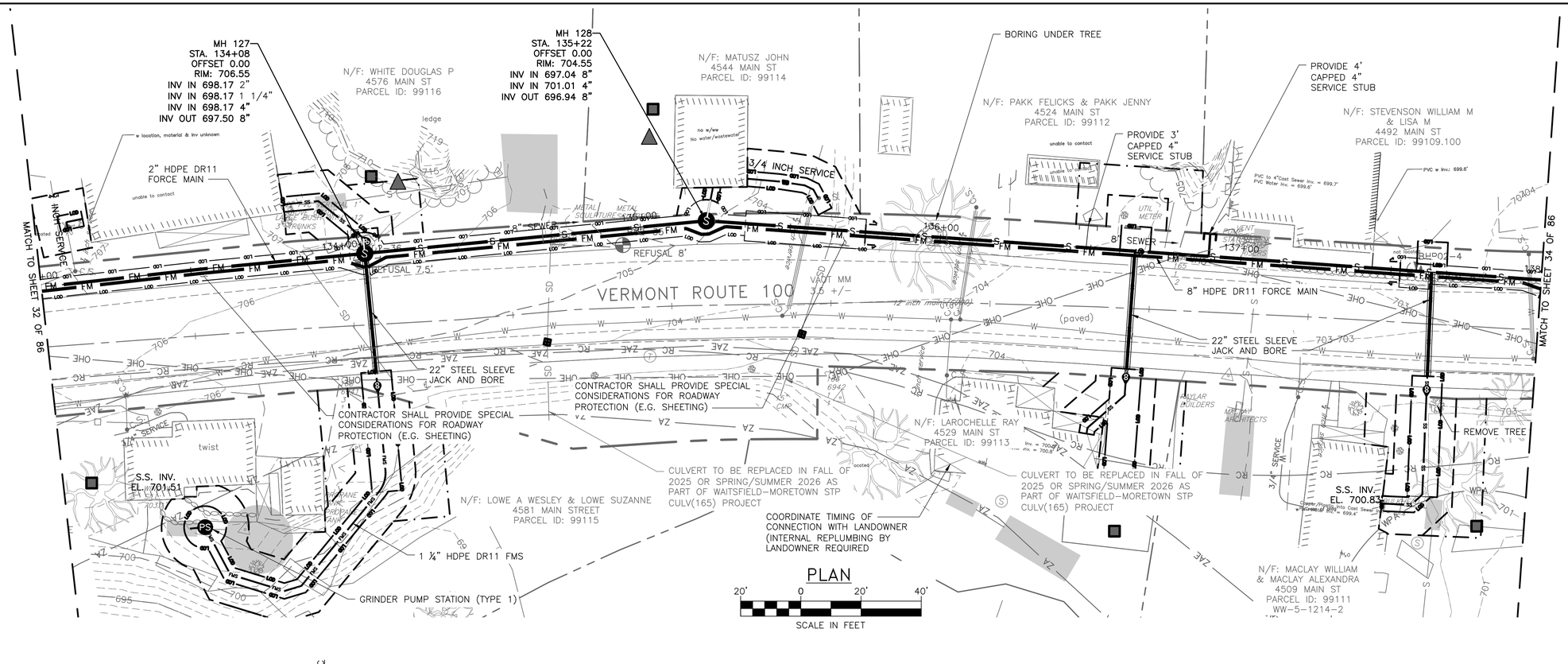

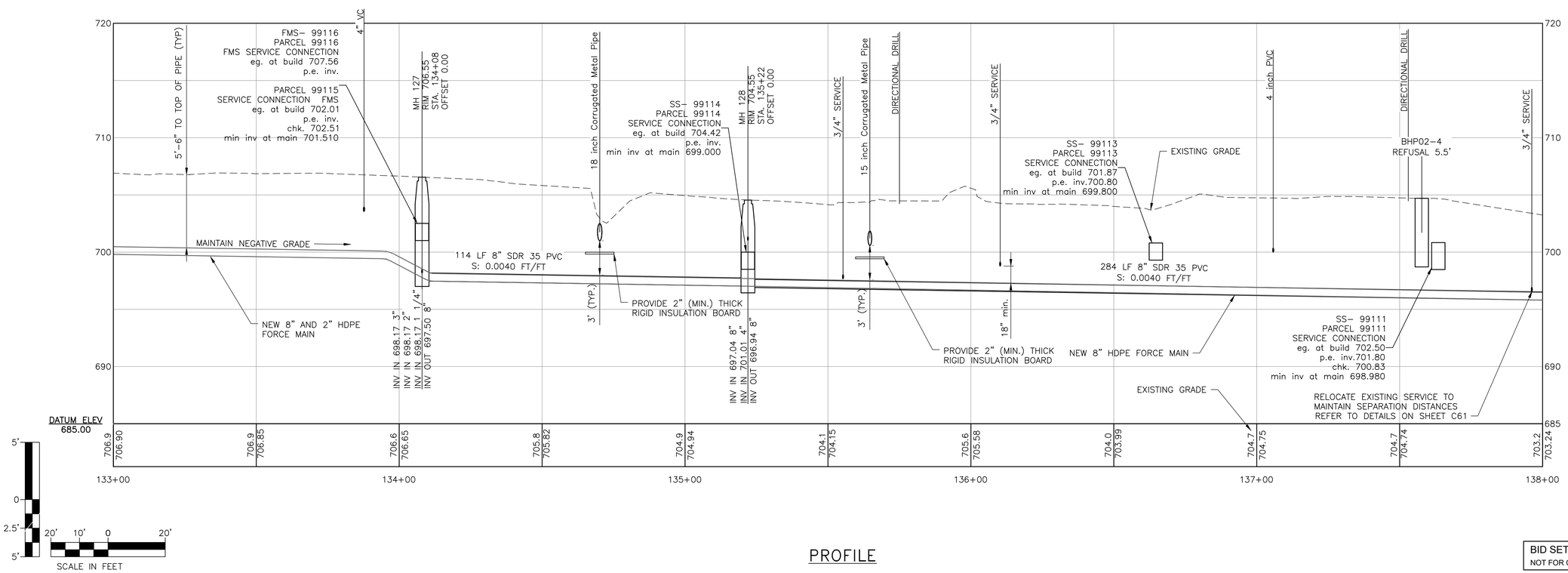

PROFILE

BID SET
NOT FOR CONSTRUCTION 7/16/2026

DuBois & King inc.
www.dubois-king.com
© Copyright 2026 DuBois & King inc.

STATE OF VERMONT
DAVID A. SHEE
No. 9000
PROFESSIONAL ENGINEER
07-16-2026
BID SET
NOT FOR CONSTRUCTION

REVISIONS			
NUMBER	DATE	REVISION DESCRIPTION	BY

CLIENT NAME
TOWN OF WAITSFIELD

PROJECT NAME
WAITSFIELD COMMUNITY WASTEWATER SYSTEM

PROJECT ADDRESS
4144 MAIN STREET
WAITSFIELD, VERMONT 05673

SHEET TITLE
CONTRACT NO. 2
PLAN AND PROFILE

STA 133+00 - 138+00

D&K PROJECT #	PROJ. ENG.
227947	JBA
DRAWN BY	CHECKED BY
EBS	DDC

DATE
JULY 2026

SHEET NUMBER
C28

SHEET: 33 of 86

I:\2\227947 Waitsfield Water and Wastewater Feasibility Stud\Drawings\Civil\Sheet Breakouts\227947-BDR-20-30.dwg 8/27/2026 10:58 AM

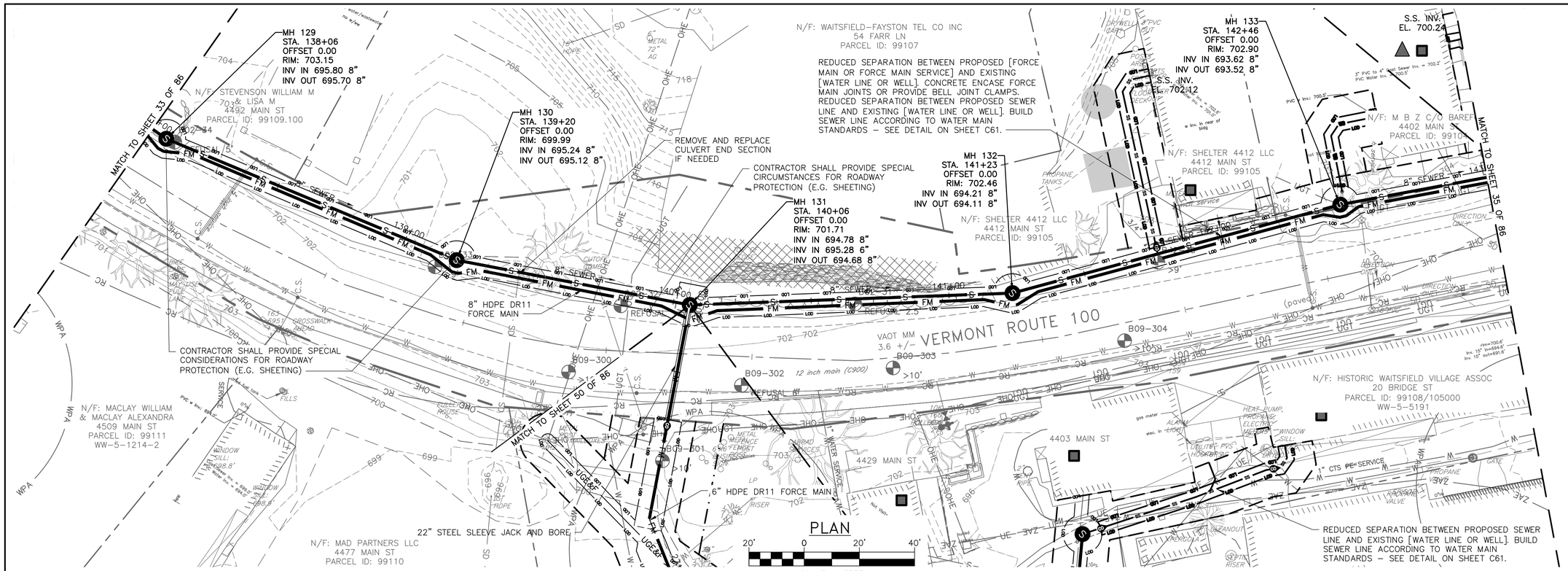

PLAN

20' 0 20' 40'

SCALE IN FEET

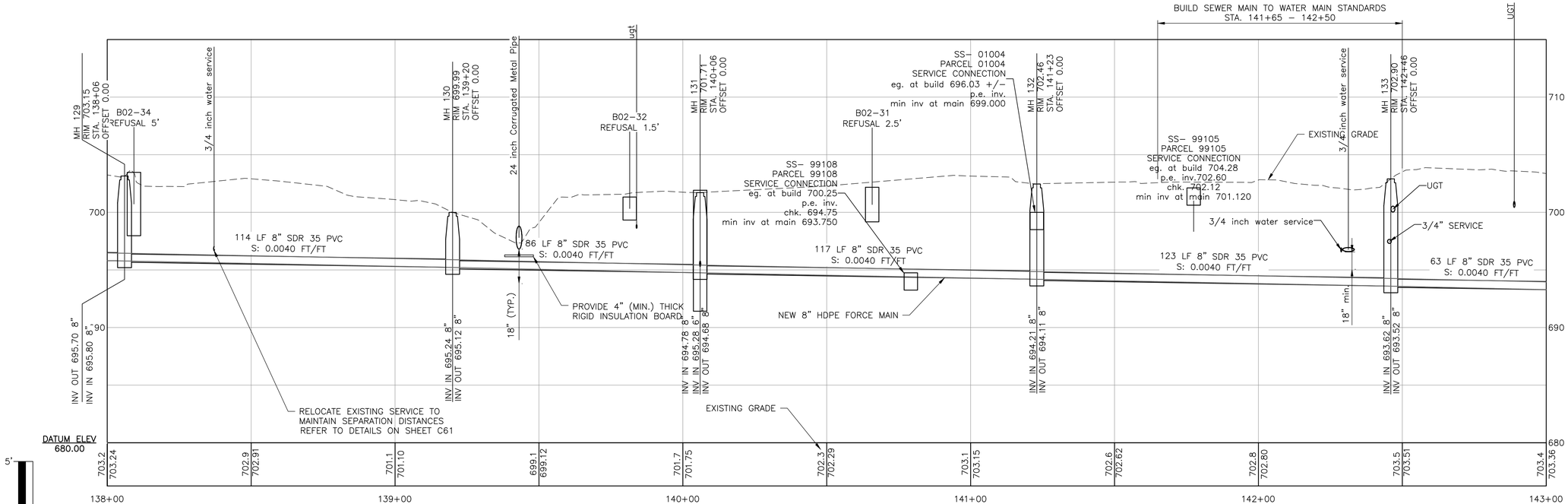

PROFILE

BID SET
NOT FOR CONSTRUCTION 7/16/2026

DuBois & King inc.

www.dubois-king.com

© Copyright 2026 DuBois & King inc.

STATE OF VERMONT
JASON BARRETT ASHLEY
PROFESSIONAL ENGINEER
07-16-2026

BID SET
NOT FOR CONSTRUCTION

REVISIONS

NUMBER	DATE	REVISION DESCRIPTION	BY

CLIENT NAME
TOWN OF WAITSFIELD

PROJECT NAME
WAITSFIELD COMMUNITY WASTEWATER SYSTEM

PROJECT ADDRESS
4144 MAIN STREET
WAITSFIELD, VERMONT 05673

SHEET TITLE
CONTRACT NO. 2
PLAN AND PROFILE

STA 138+00 - 143+00

D&K PROJECT #	PROJ. ENG.
227947	JBA
DRAWN BY	CHECKED BY
EBS	DDC

DATE
JULY 2026

SHEET NUMBER
C29

SHEET: 34 of 86

I:\2\227947 Waitsfield Water and Wastewater Feasibility Stud\Drawings\Civil\Sheet Breakouts\227947-BDR-20-30.dwg 8/27/2026 10:59 AM

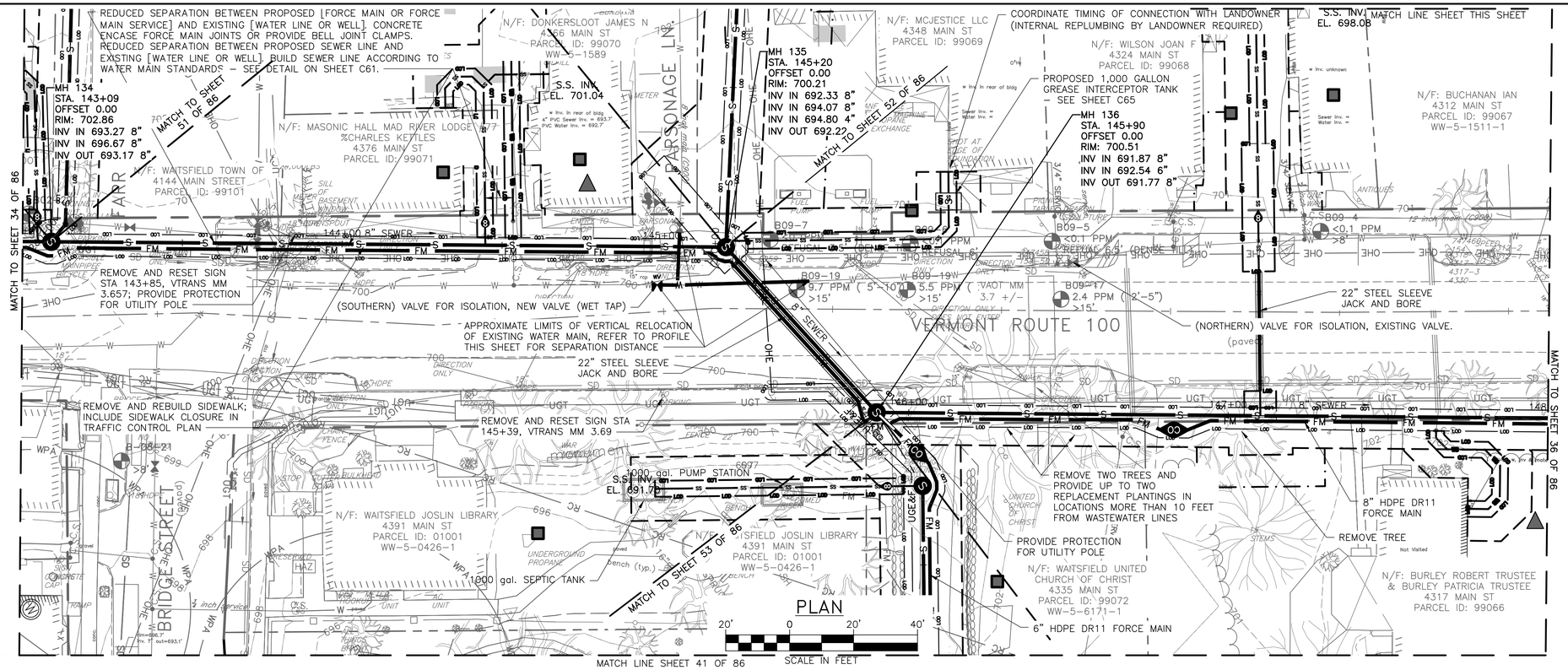

PLAN

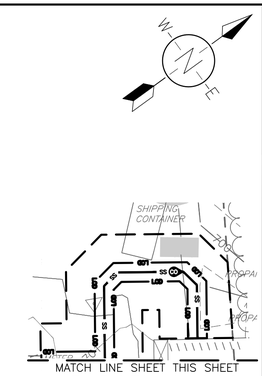

PARCEL 99068
SERVICE

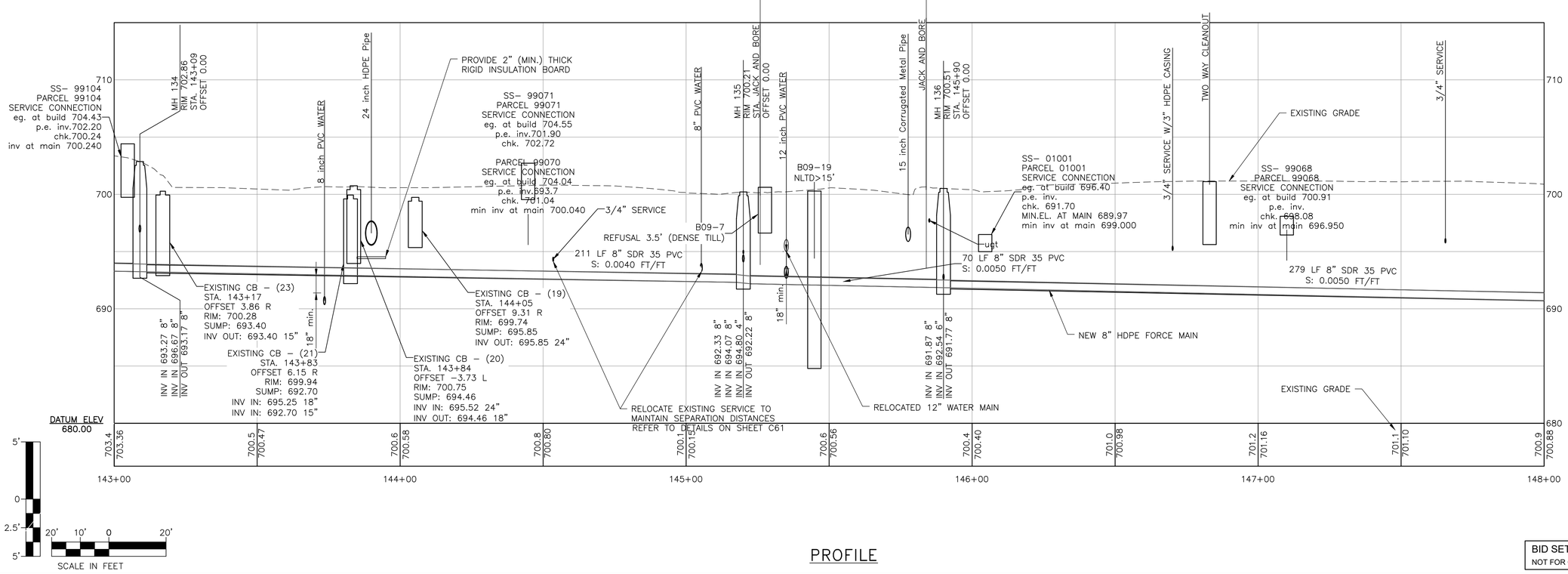

PROFILE

BID SET
NOT FOR CONSTRUCTION 7/16/2026

DuBois & King inc.
www.dubois-king.com
© Copyright 2026 DuBois & King inc.

STATE OF VERMONT
BID SET
NOT FOR CONSTRUCTION
07-16-2026

REVISIONS

NUMBER	DATE	REVISION DESCRIPTION	BY

CLIENT NAME
TOWN OF WAITSFIELD

PROJECT NAME
WAITSFIELD COMMUNITY WASTEWATER SYSTEM

PROJECT ADDRESS
4144 MAIN STREET
WAITSFIELD, VERMONT 05673

SHEET TITLE
CONTRACT NO. 2
PLAN AND PROFILE
STA 143+00 - 148+00

D&K PROJECT #	PROJ. ENG.
227947	JBA
DRAWN BY EBS	CHECKED BY DDC
DATE JULY 2026	

SHEET NUMBER
C30

I:\2\227947 Waitsfield Water and Wastewater Feasibility Stud\Drawings\Civil\Sheet Breakouts\227947-BDR-20-30.dwg 8/27/2026 11:01 AM

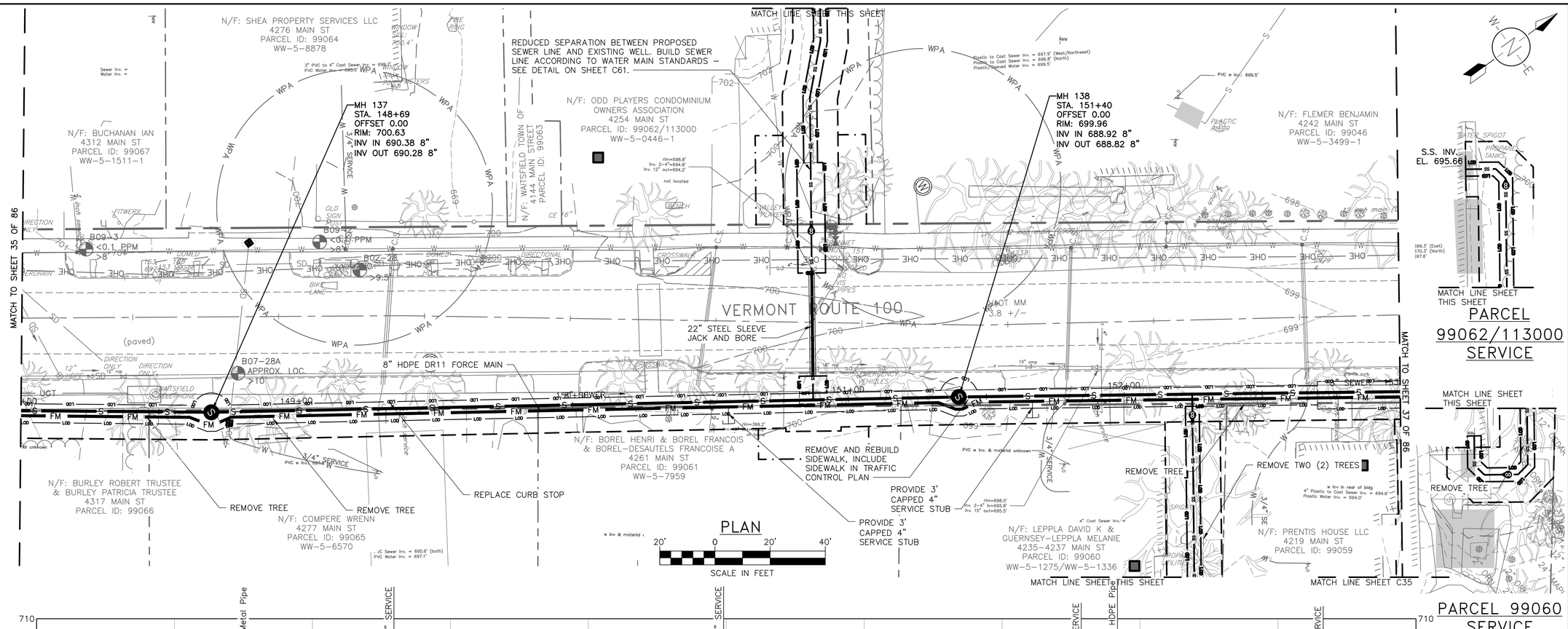

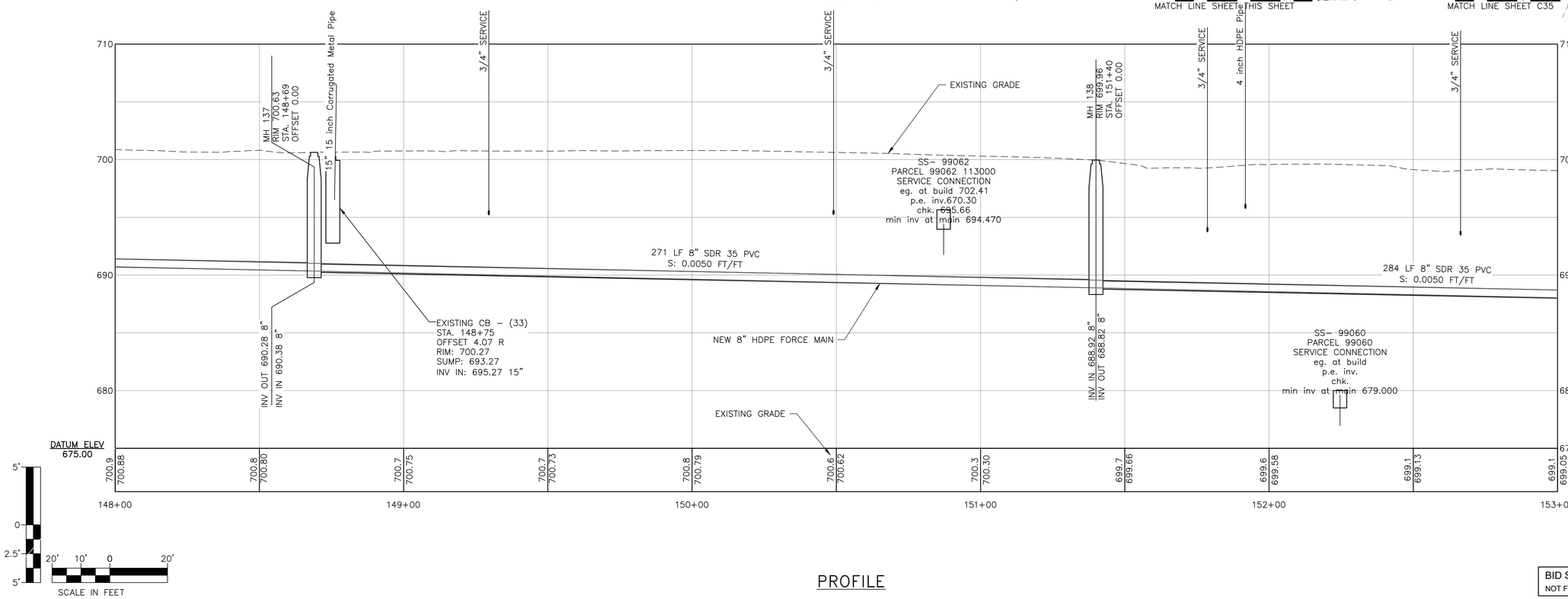

PROFILE

BID SET
NOT FOR CONSTRUCTION
7/16/2026

DuBois & King inc.
www.dubois-king.com
© Copyright 2026 DuBois & King inc.

STATE OF VERMONT
DAVID B. SHEE
No. 9000
PROFESSIONAL ENGINEER
07-16-2026
BID SET
NOT FOR CONSTRUCTION

REVISIONS			
NUMBER	DATE	REVISION DESCRIPTION	BY

CLIENT NAME
TOWN OF WAITSFIELD

PROJECT NAME
WAITSFIELD COMMUNITY WASTEWATER SYSTEM

PROJECT ADDRESS
4144 MAIN STREET
WAITSFIELD, VERMONT 05673

SHEET TITLE
CONTRACT NO. 2
PLAN AND PROFILE
STA 148+00 - 153+00

D&K PROJECT #	PROJ. ENG.
227947	JBA
DRAWN BY	CHECKED BY
EBS	DDC

DATE
JULY 2026

SHEET NUMBER
C31

SHEET: 36 of 86

I:\2\227947 Waitsfield Water and Wastewater Feasibility Stud\Drawings\Civil\Sheet Breakouts\227947-BDR-20-30.dwg 8/27/2026 11:03 AM

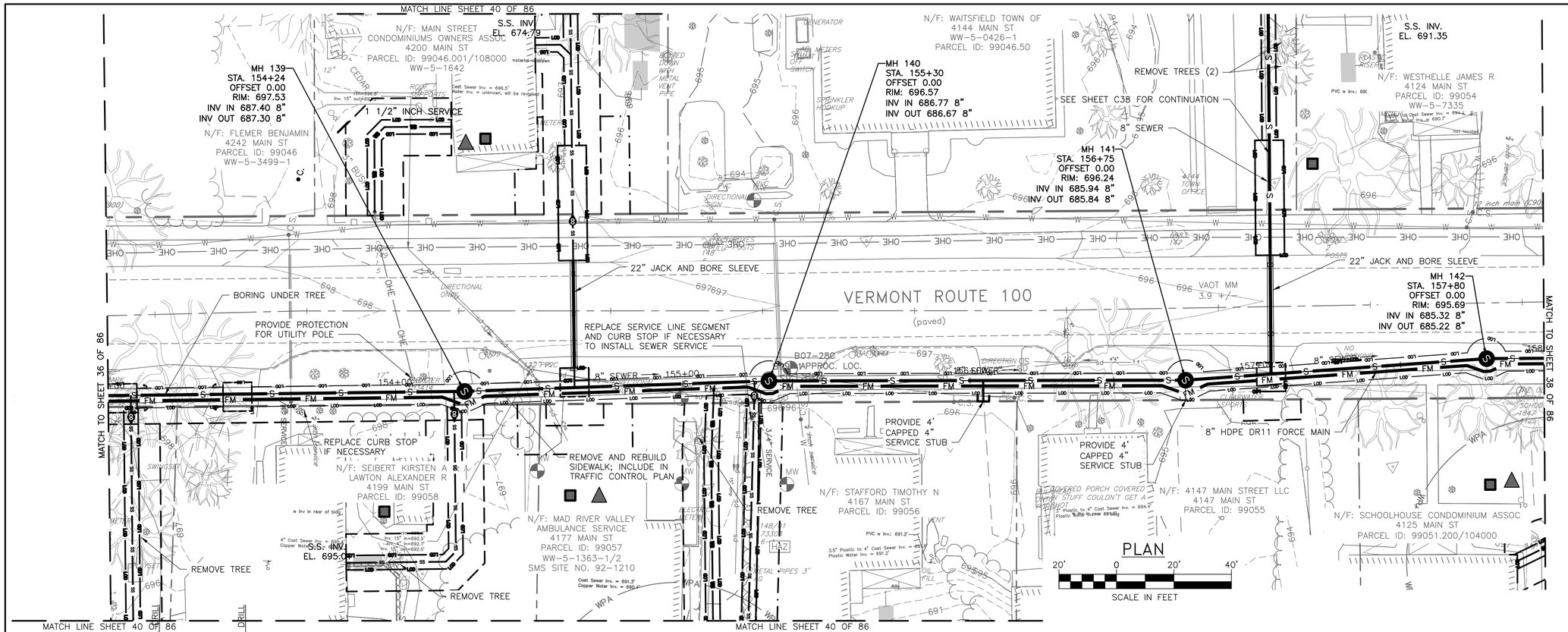

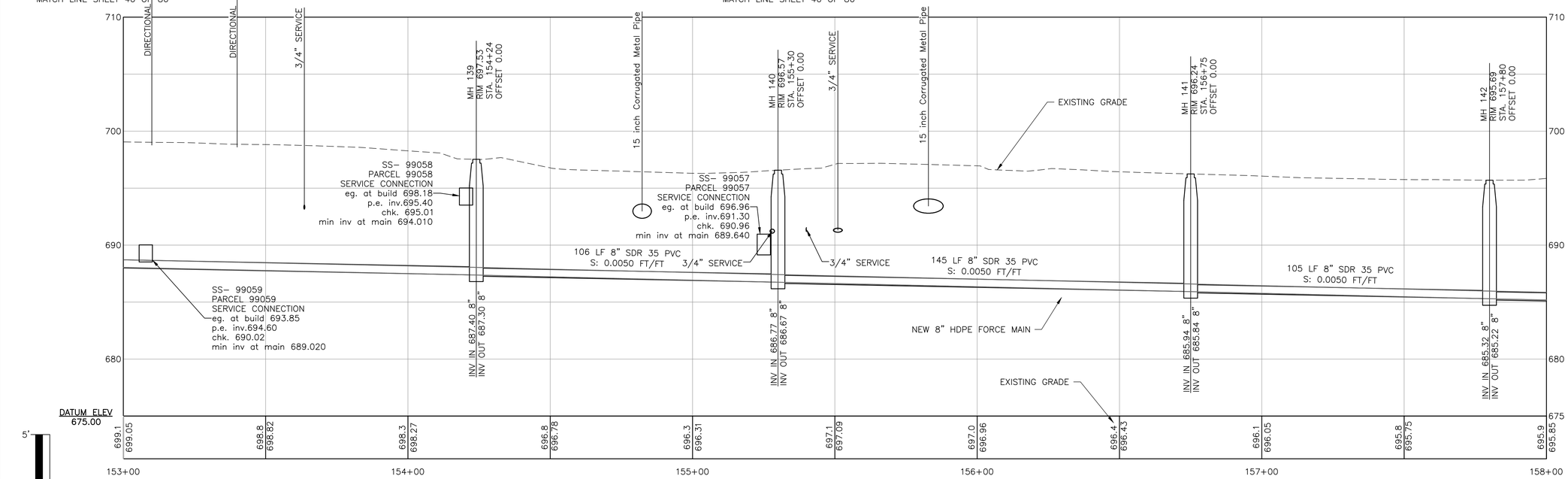

PROFILE

BID SET
NOT FOR CONSTRUCTION 7/16/2026

DuBois & King inc.
www.dubois-king.com
© Copyright 2026 DuBois & King inc.

STATE OF VERMONT
BID SET
NOT FOR CONSTRUCTION
07-16-2026

REVISIONS

NUMBER	DATE	REVISION DESCRIPTION	BY

CLIENT NAME
TOWN OF WAITSFIELD

PROJECT NAME
WAITSFIELD COMMUNITY WASTEWATER SYSTEM

PROJECT ADDRESS
4144 MAIN STREET
WAITSFIELD, VERMONT 05673

SHEET TITLE
CONTRACT NO. 2
PLAN AND PROFILE

STA 153+00 - 158+00

D&K PROJECT #	PROJ. ENG.
227947	JBA
DRAWN BY	CHECKED BY
EBS	DDC

DATE
JULY 2026

SHEET NUMBER
C32

SHEET: 37 of 86

I:\2\227947 Waitsfield Water and Wastewater Feasibility Stud\Drawings\Civil\Sheet Breakouts\227947-BDR-30-40.dwg 8/27/2026 11:05 AM

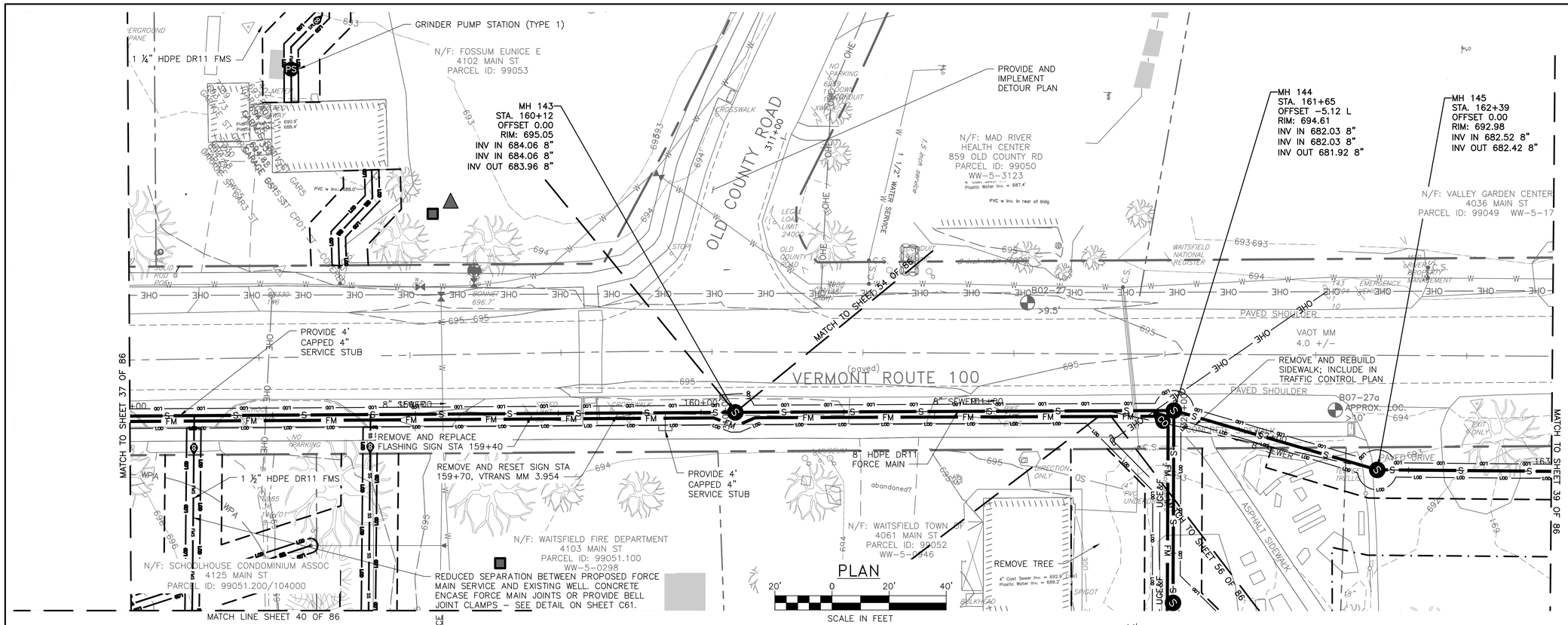

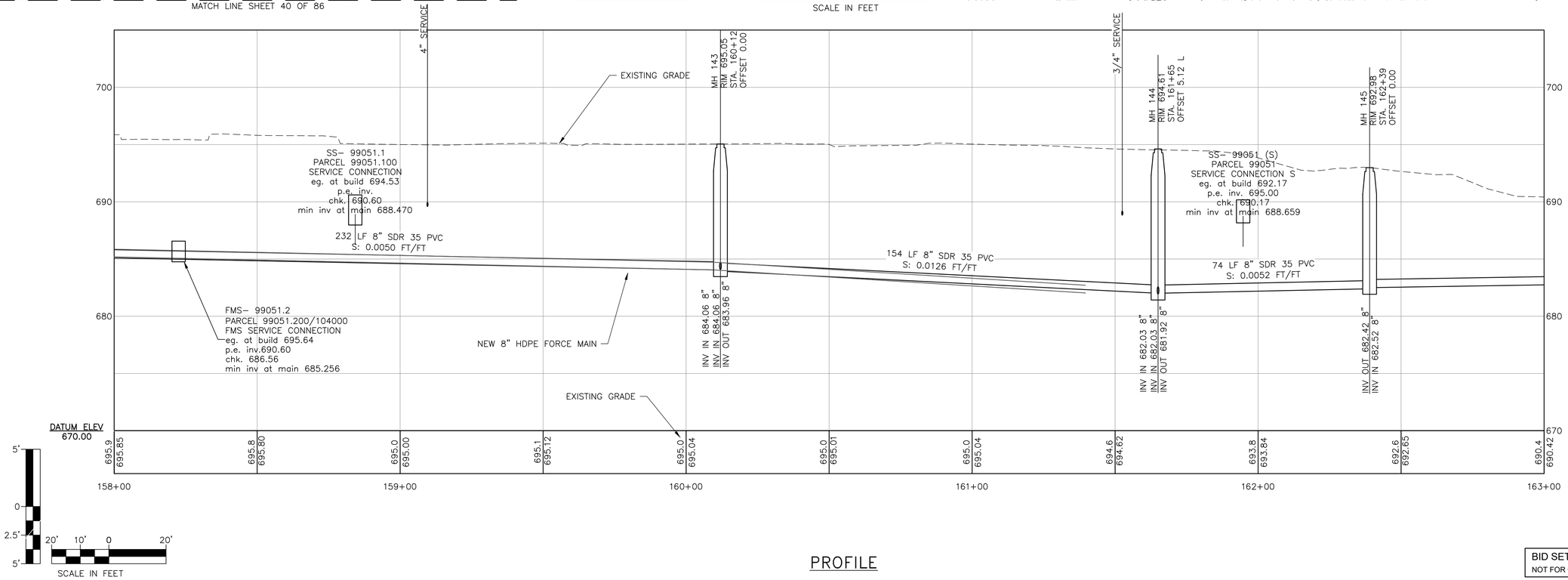

PROFILE

BID SET
NOT FOR CONSTRUCTION 7/16/2026

DuBois & King inc.
www.dubois-king.com
© Copyright 2026 DuBois & King inc.

STATE OF VERMONT
DAVID A. SHEE
PROFESSIONAL ENGINEER
07-16-2026
BID SET
NOT FOR CONSTRUCTION

REVISIONS			
NUMBER	DATE	REVISION DESCRIPTION	BY

CLIENT NAME
TOWN OF WAITSFIELD

PROJECT NAME
WAITSFIELD COMMUNITY WASTEWATER SYSTEM

PROJECT ADDRESS
4144 MAIN STREET
WAITSFIELD, VERMONT 05673

SHEET TITLE
CONTRACT NO. 2
PLAN AND PROFILE
STA 158+00 - 163+00

D&K PROJECT #	PROJ. ENG.
227947	JBA
DRAWN BY	CHECKED BY
EBS	DDC

DATE
JULY 2026

SHEET NUMBER
C33

SHEET: 38 of 86

I:\2\227947 Waitsfield Water and Wastewater Feasibility Stud\Drawings\Civil\Sheet Breakouts\227947-BDR-30-40.dwg 8/27/2026 11:06 AM

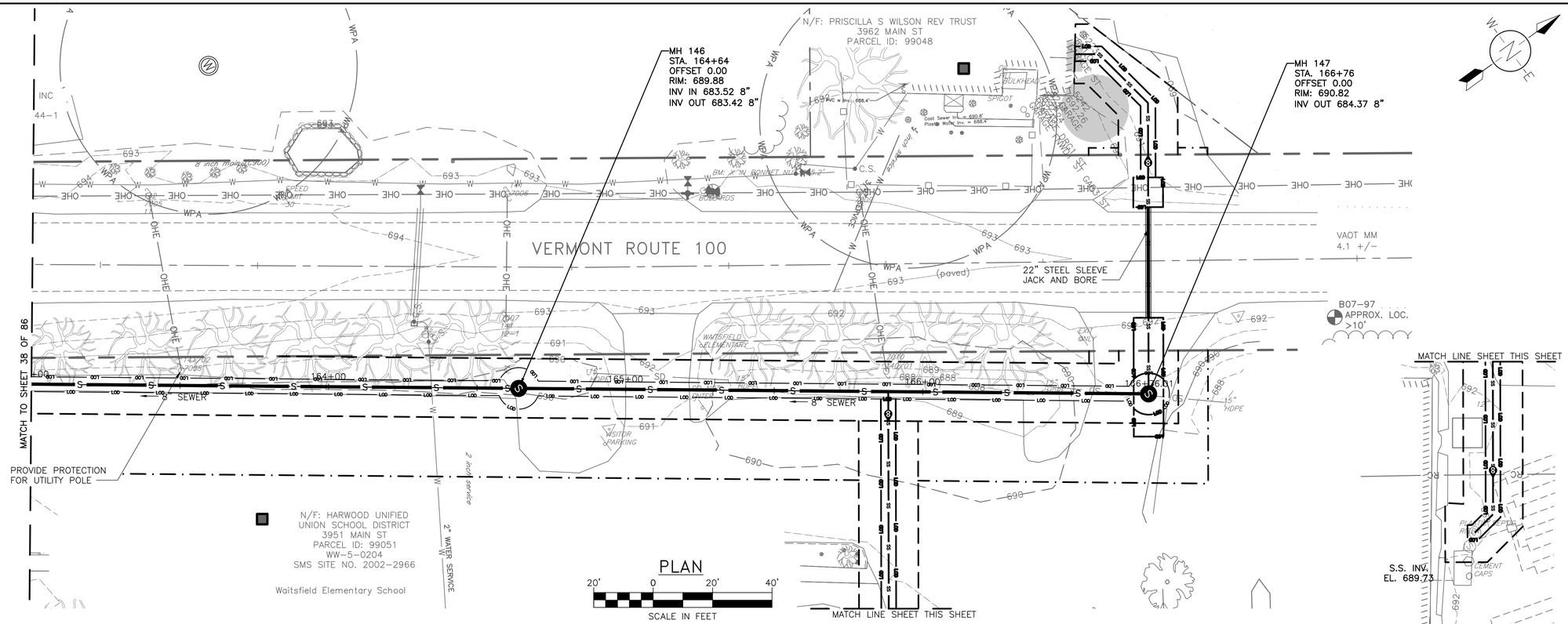

PLAN

SCALE IN FEET

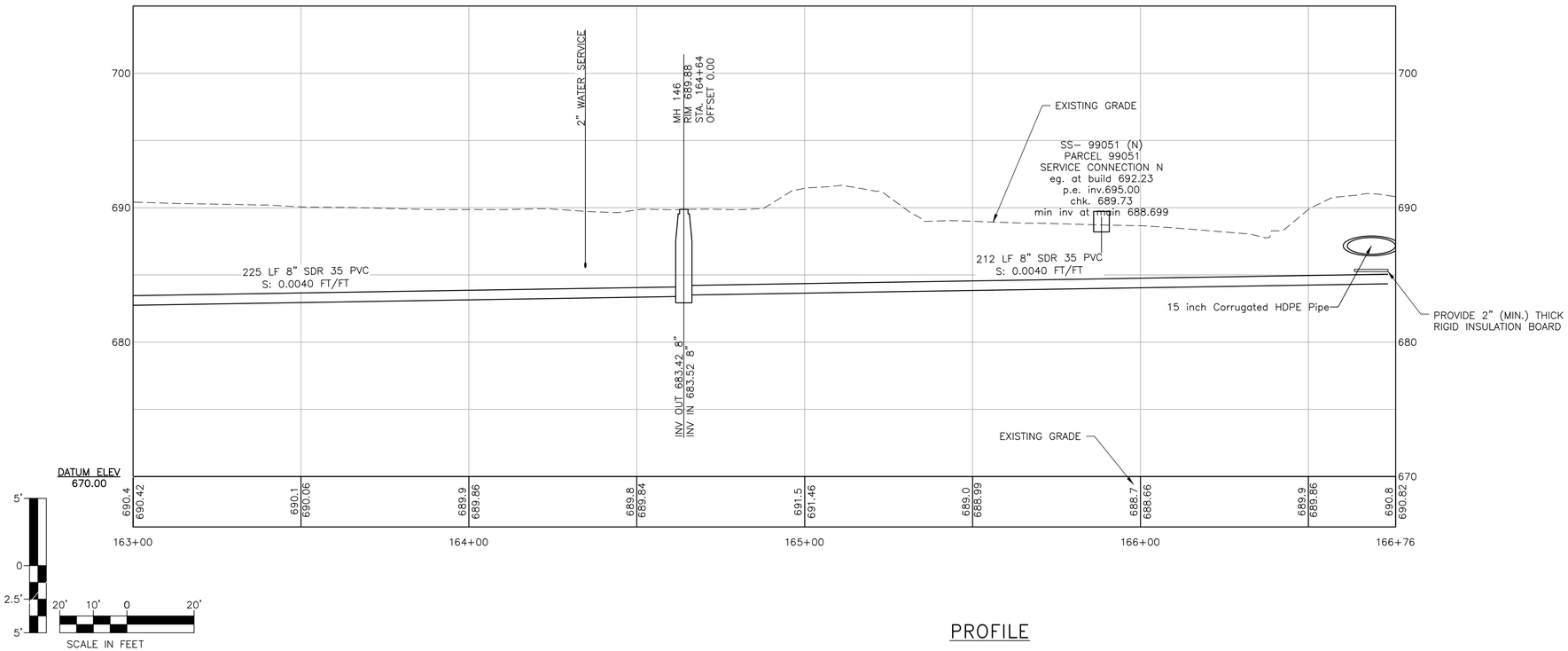

PROFILE

SCALE IN FEET

BID SET
NOT FOR CONSTRUCTION 7/16/2026

DuBois & King inc.

www.dubois-king.com

© Copyright 2026 DuBois & King inc.

STATE OF VERMONT
JAMES B. ASHE
PROFESSIONAL ENGINEER
07-16-2026

BID SET
NOT FOR CONSTRUCTION

REVISIONS			
NUMBER	DATE	REVISION DESCRIPTION	BY

CLIENT NAME
TOWN OF WAITSFIELD

PROJECT NAME
WAITSFIELD COMMUNITY WASTEWATER SYSTEM

PROJECT ADDRESS
4144 MAIN STREET
WAITSFIELD, VERMONT 05673

SHEET TITLE
CONTRACT NO. 2
PLAN AND PROFILE

STA 163+00 - 168+00

D&K PROJECT #	PROJ. ENG.
227947	JBA
DRAWN BY	CHECKED BY
EBS	DDC

DATE
JULY 2026

SHEET NUMBER
C34

SHEET: 39 of 86

I:\2\227947 Waitsfield Water and Wastewater Feasibility Stud\Drawings\Civil\Sheet Breakouts\227947-BDR-30-40.dwg 8/27/2026 11:07 AM

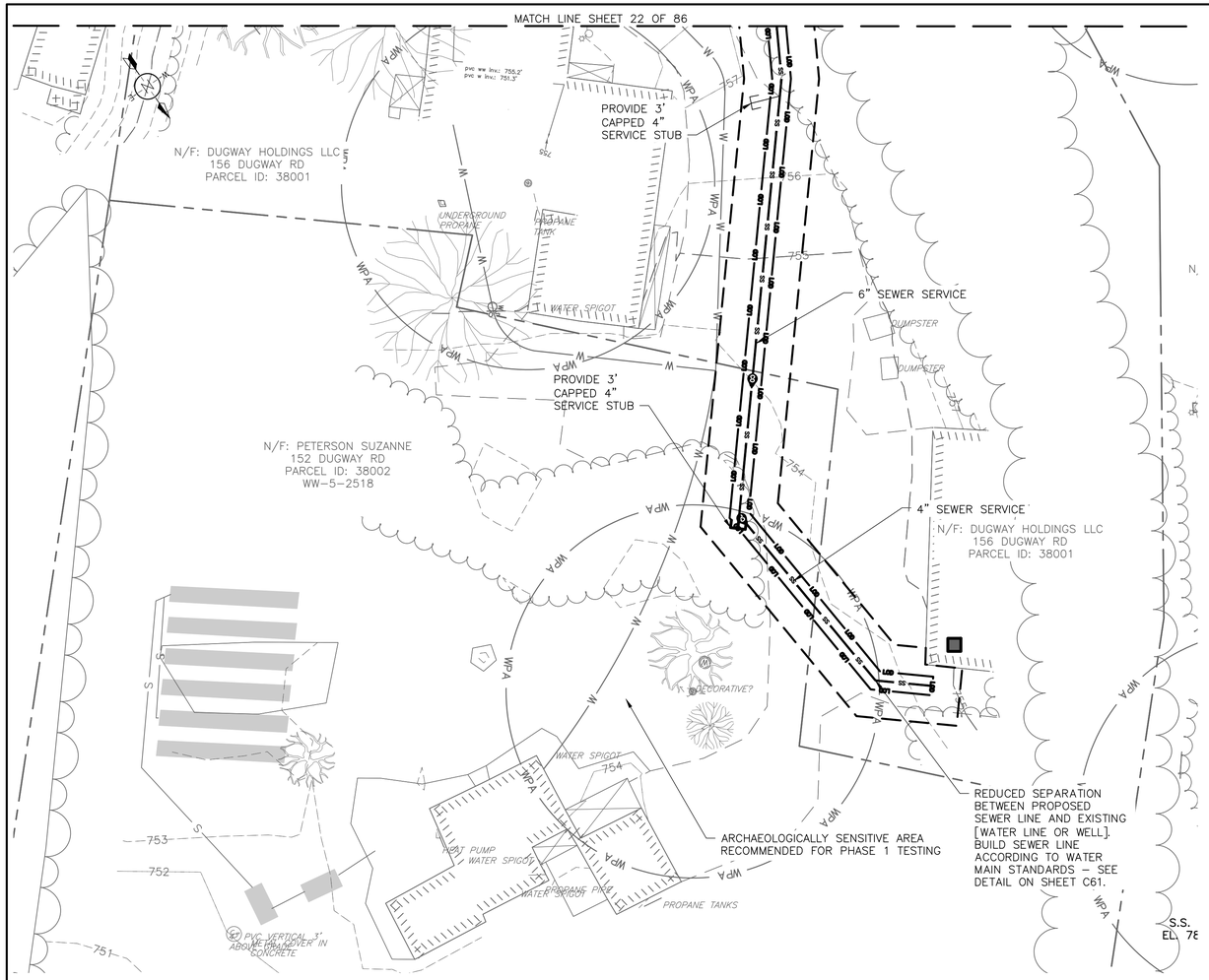

PARCEL 38001 SERVICE

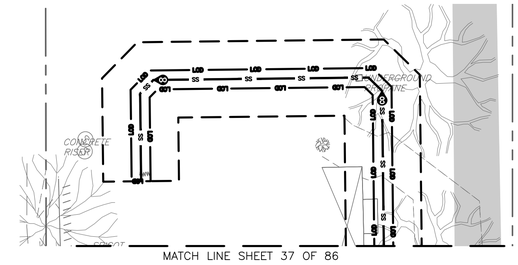

PARCEL 99046.001/108000 SERVICE

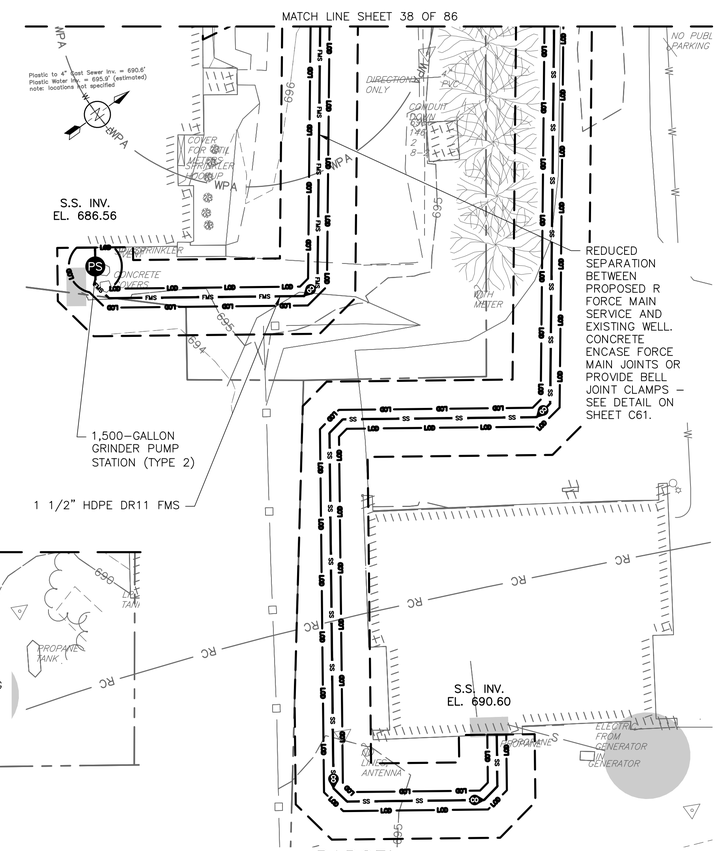

PARCEL 99051.200/104000 AND 99051.100 SERVICE

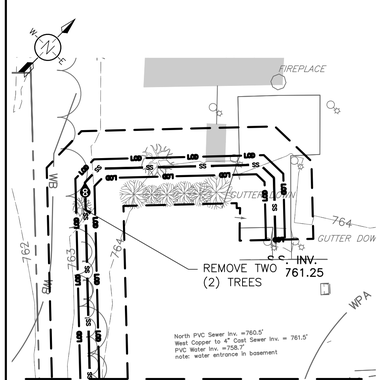

PARCEL 99128.000 SERVICE

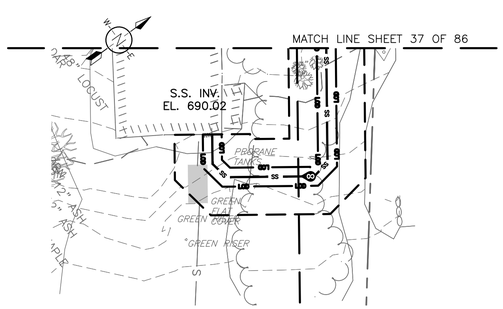

PARCEL 99059 SERVICE

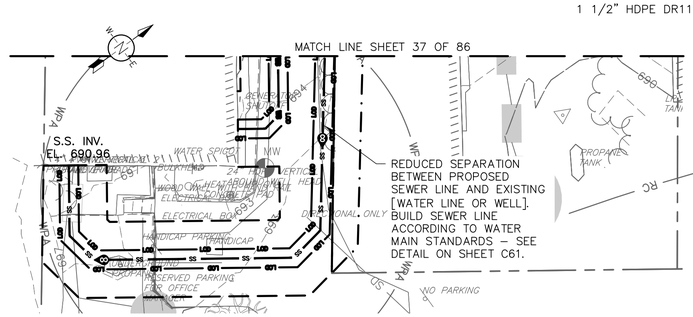

PARCEL 99057 SERVICE PLAN

20' 0 20' 40'
SCALE IN FEET

BID SET
NOT FOR CONSTRUCTION 7/16/2026

DuBois & King inc.
www.dubois-king.com
© Copyright 2026 DuBois & King inc.

STATE OF VERMONT
BID SET
NOT FOR CONSTRUCTION
07-16-2026

REVISIONS

NUMBER	DATE	REVISION DESCRIPTION	BY

CLIENT NAME
TOWN OF WAITSFIELD

PROJECT NAME
WAITSFIELD COMMUNITY WASTEWATER SYSTEM

PROJECT ADDRESS
4144 MAIN STREET
WAITSFIELD, VERMONT 05673

SHEET TITLE
CONTRACT NO. 2
SERVICE EXTENSIONS SHEET 1 OF 4

D&K PROJECT #	PROJ. ENG.
227947	JBA
DRAWN BY	CHECKED BY
EBS	DDC

DATE
JULY 2026

SHEET NUMBER
C35

I:\2\227947 Waitsfield Water and Wastewater Feasibility Stud\Drawings\Civil\Sheet Breakouts\227947-BDR-30-40.dwg 8/27/2026 11:10 AM

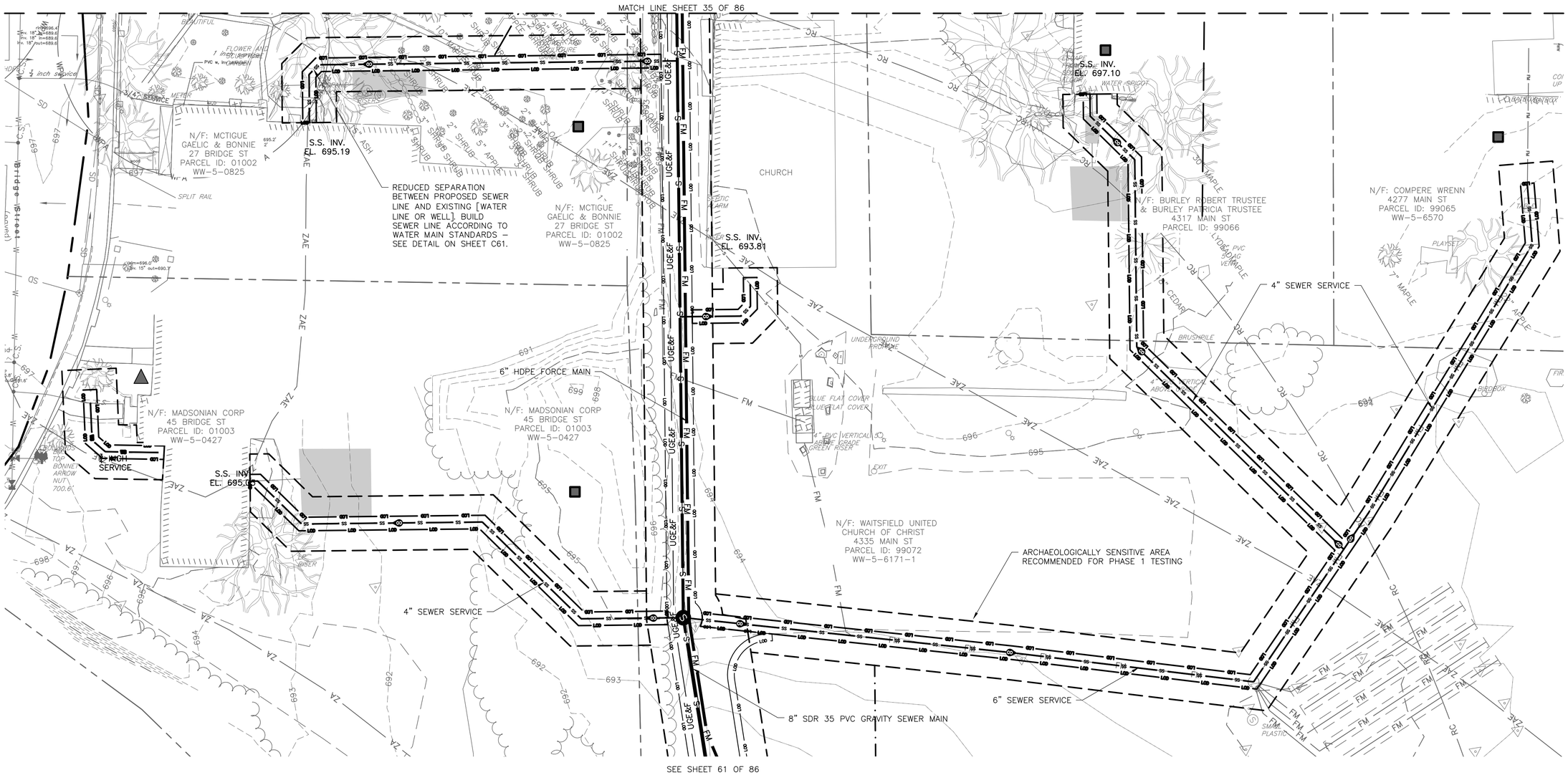

PLAN

20' 0 20' 40'

SCALE IN FEET

PARCEL
99051.200/104000 AND
99051.100 SERVICE

BID SET
NOT FOR CONSTRUCTION 7/16/2026

DuBois & King inc.

www.dubois-king.com

© Copyright 2026 DuBois & King inc.

STATE OF VERMONT
DAVID C. BOSTWICK
No. 9000
PROFESSIONAL ENGINEER
07-16-2026

BID SET
NOT FOR CONSTRUCTION

REVISIONS			
NUMBER	DATE	REVISION DESCRIPTION	BY

CLIENT NAME
TOWN OF WAITSFIELD

PROJECT NAME
WAITSFIELD COMMUNITY WASTEWATER SYSTEM

PROJECT ADDRESS
4144 MAIN STREET
WAITSFIELD, VERMONT 05673

SHEET TITLE
CONTRACT NO. 2
SERVICE EXTENSIONS SHEET 2 OF 4

D&K PROJECT #	PROJ. ENG.
227947	JBA
DRAWN BY	CHECKED BY
EBS	DDC

DATE
JULY 2026

SHEET NUMBER
C36

SHEET: 41 of 86

I:\227947 Waitsfield Water and Wastewater Feasibility Stud\Drawings\Civil\Sheet Breakouts\227947-BDR-30-40.dwg 8/27/2026 11:11 AM

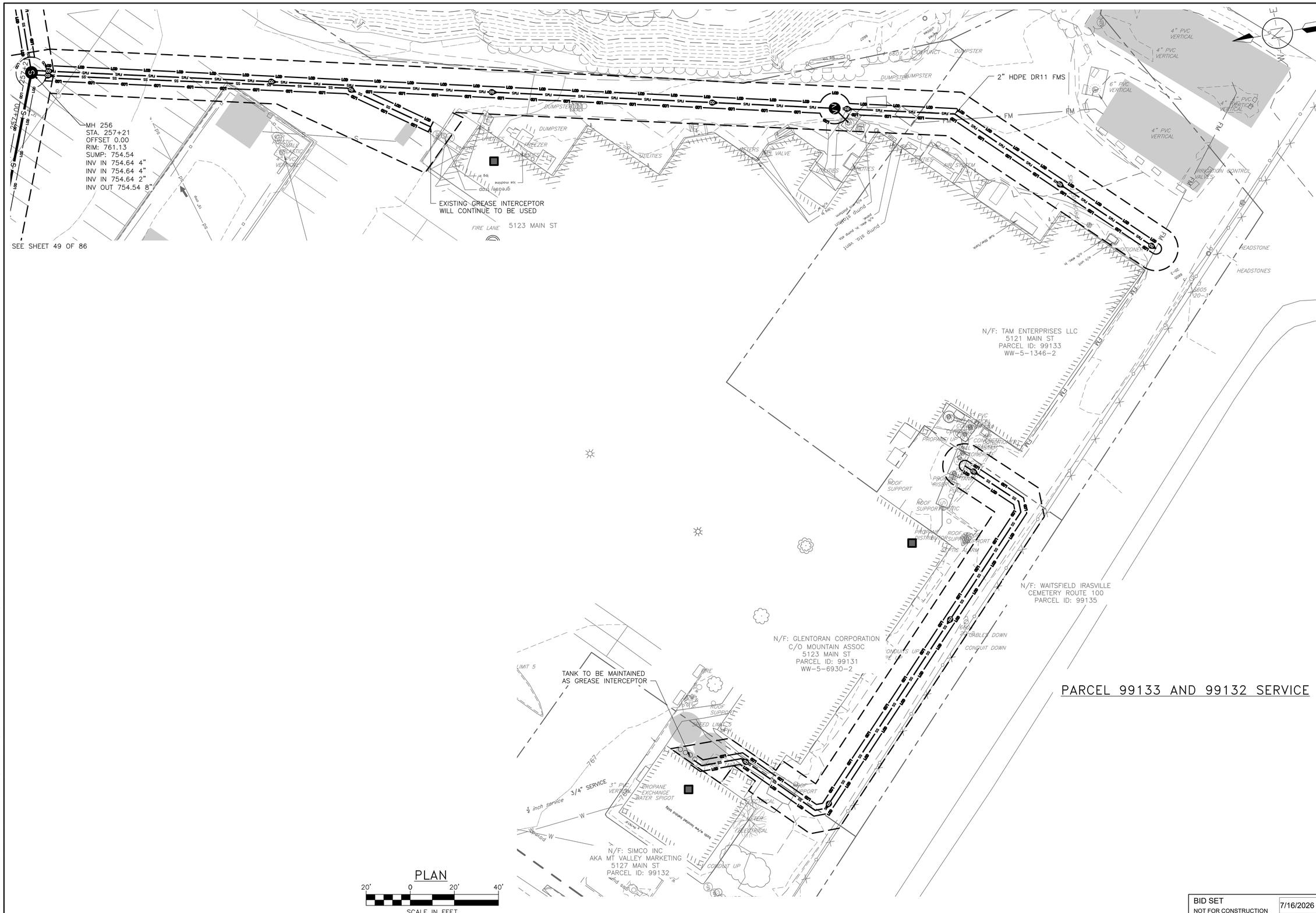

BID SET
NOT FOR CONSTRUCTION
7/16/2026

DuBois & King inc.
www.dubois-king.com
© Copyright 2026 DuBois & King inc.

STATE OF VERMONT
DAVID A. SHEE
No. 9000
PROFESSIONAL ENGINEER
07-16-2026

BID SET
NOT FOR CONSTRUCTION

REVISIONS

NUMBER	DATE	REVISION DESCRIPTION	BY

CLIENT NAME
TOWN OF WAITSFIELD

PROJECT NAME
WAITSFIELD COMMUNITY WASTEWATER SYSTEM

PROJECT ADDRESS
4144 MAIN STREET
WAITSFIELD, VERMONT 05673

SHEET TITLE
CONTRACT NO. 2

SERVICE EXTENSIONS SHEET 3 OF 4

D&K PROJECT #	PROJ. ENG.
227947	JBA
DRAWN BY	CHECKED BY
EBS	DDC

DATE
JULY 2026

SHEET NUMBER
C37

SHEET: 42 of 86

I:\2\227947 Waitsfield Water and Wastewater Feasibility Stud\Drawings\Civil\Sheet Breakouts\227947-BDR-30-40.dwg 8/27/2026 11:11 AM

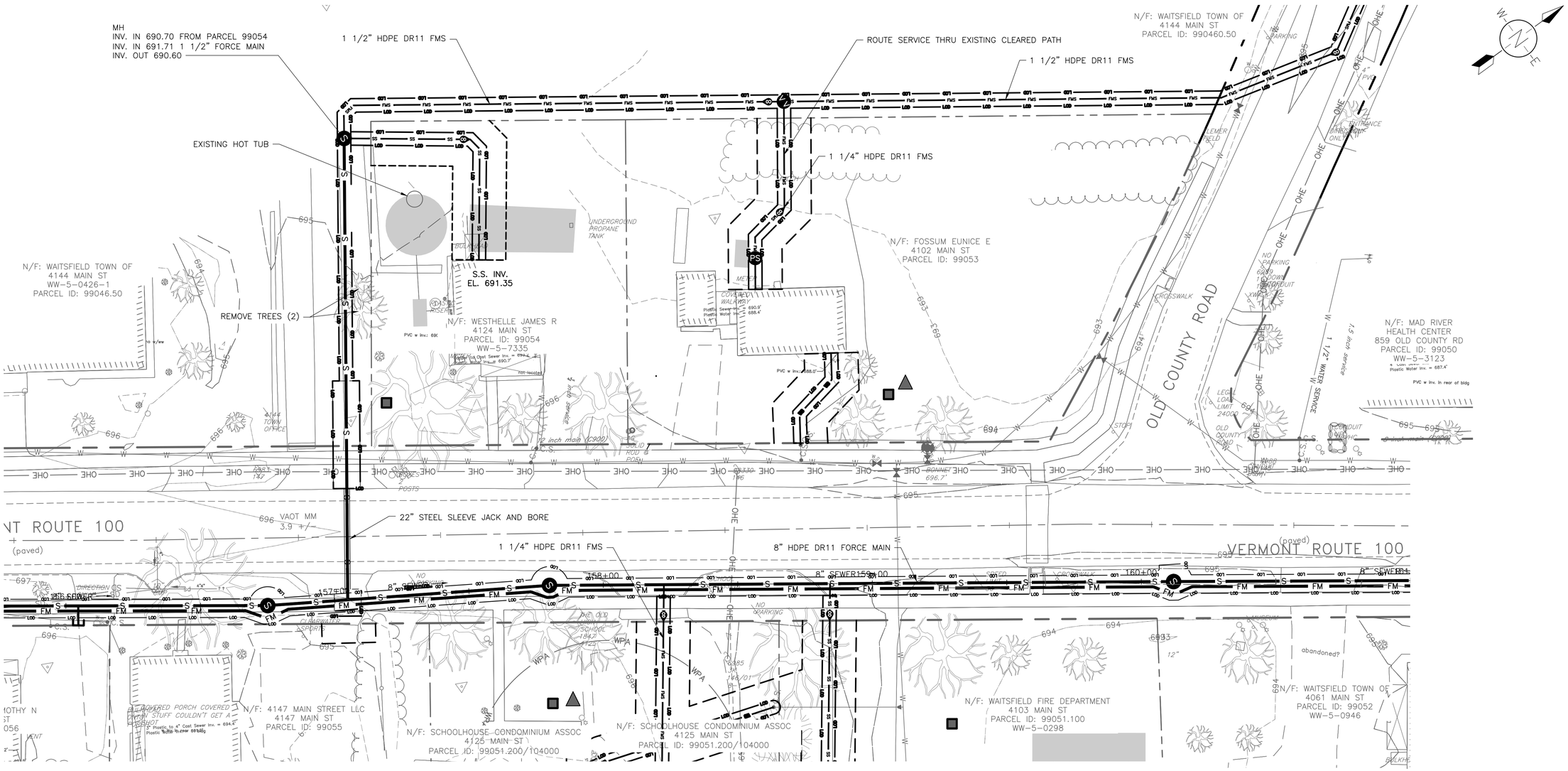

PLAN

20' 0 20' 40'

SCALE IN FEET

5' 0 2.5' 5'

20' 10' 0 20'

SCALE IN FEET

BID SET
NOT FOR CONSTRUCTION 7/16/2026

DuBois & King inc.

www.dubois-king.com

© Copyright 2026 DuBois & King inc.

STATE OF VERMONT
JAMES B. ASHE
No. 9000
PROFESSIONAL ENGINEER
07-16-2026

BID SET
NOT FOR CONSTRUCTION

REVISIONS			
NUMBER	DATE	REVISION DESCRIPTION	BY

CLIENT NAME
TOWN OF WAITSFIELD

PROJECT NAME
WAITSFIELD COMMUNITY WASTEWATER SYSTEM

PROJECT ADDRESS
4144 MAIN STREET
WAITSFIELD, VERMONT 05673

SHEET TITLE
CONTRACT NO. 2
SERVICE EXTENSIONS
SHEET 4 OF 4

D&K PROJECT #	PROJ. ENG.
227947	JBA
DRAWN BY	CHECKED BY
EBS	DDC

DATE
JULY 2026

SHEET NUMBER
C38

SHEET: 43 of 86

I:\2\227947 Waitsfield Water and Wastewater Feasibility Stud\Drawings\Civil\Sheet Breakouts\227947-BDR-BRANCH-2.dwg 8/27/2026 11:13 AM

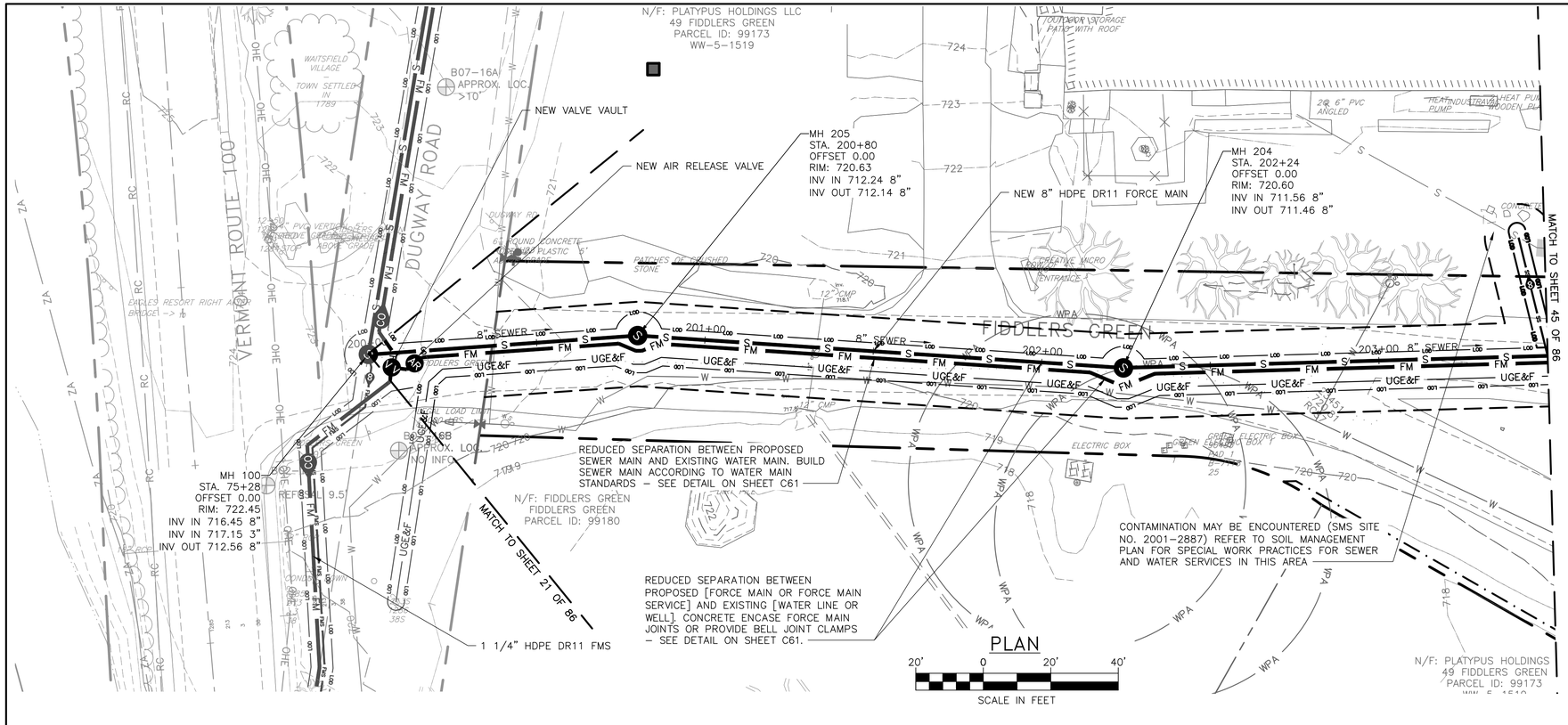

PLAN

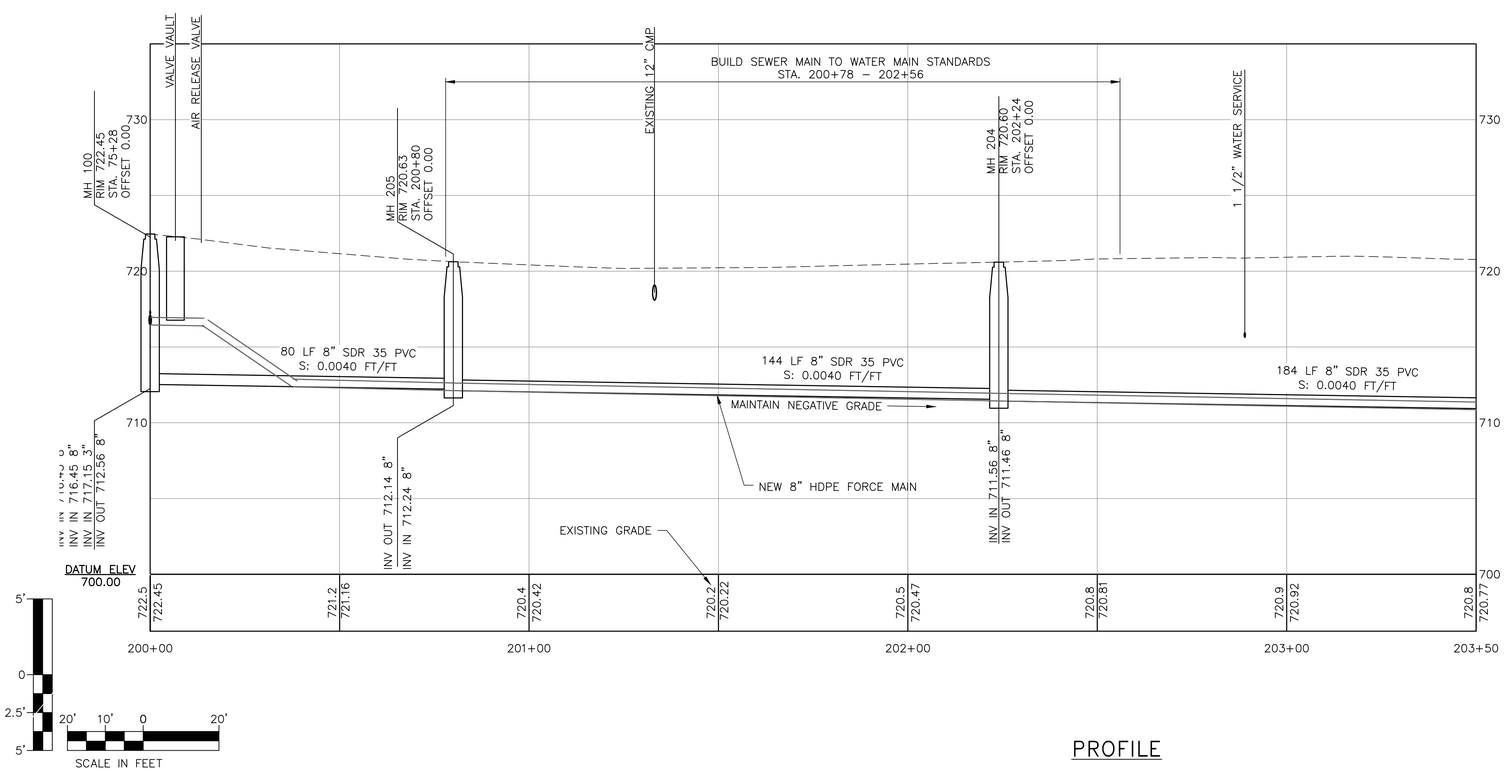

PROFILE

BID SET
NOT FOR CONSTRUCTION 7/16/2026

DuBois & King inc.
www.dubois-king.com
© Copyright 2026 DuBois & King inc.

STATE OF VERMONT
ASHLEY B. BOUCHARD
PROFESSIONAL ENGINEER
07-16-2026

BID SET
NOT FOR CONSTRUCTION

REVISIONS

NUMBER	DATE	REVISION DESCRIPTION	BY

CLIENT NAME
TOWN OF WAITSFIELD

PROJECT NAME
WAITSFIELD COMMUNITY WASTEWATER SYSTEM

PROJECT ADDRESS
4144 MAIN STREET
WAITSFIELD, VERMONT 05673

SHEET TITLE
CONTRACT NO. 2
PLAN AND PROFILE
FIDDLERS GREEN
BRANCH 1 OF 2

D&K PROJECT #	PROJ. ENG.
227947	JBA
DRAWN BY	CHECKED BY
EBS	DDC

DATE
JULY 2026

SHEET NUMBER
C39

I:\2\227947 Waitsfield Water and Wastewater Feasibility Stud\Drawings\Civil\Sheet Breakouts\227947-BDR-BRANCH.dwg 8/27/2026 11:15 AM

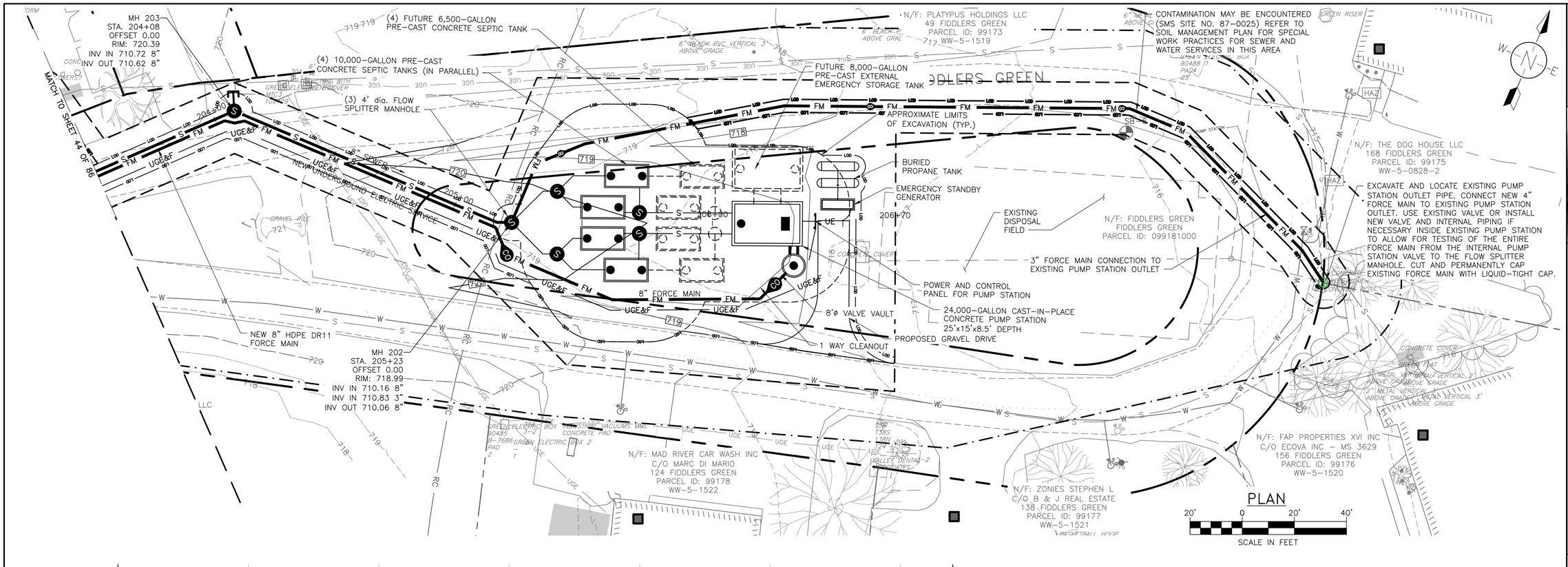

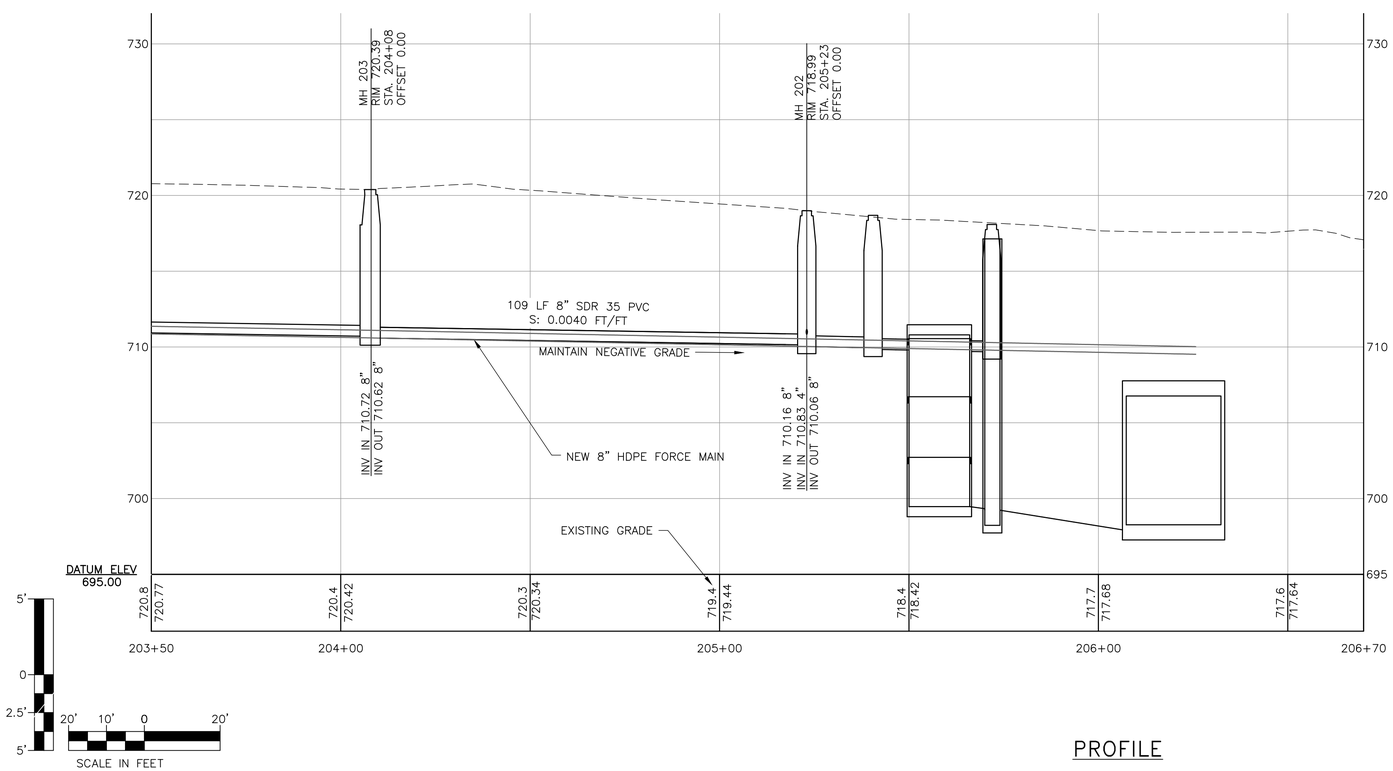

PROFILE

BID SET
NOT FOR CONSTRUCTION 7/16/2026

DuBois & King inc.
www.dubois-king.com
© Copyright 2026 DuBois & King inc.

STATE OF VERMONT
BID SET
NOT FOR CONSTRUCTION
07-16-2026

REVISIONS

NUMBER	DATE	REVISION DESCRIPTION	BY

CLIENT NAME
TOWN OF WAITSFIELD

PROJECT NAME
WAITSFIELD COMMUNITY WASTEWATER SYSTEM

PROJECT ADDRESS
4144 MAIN STREET
WAITSFIELD, VERMONT 05673

SHEET TITLE
CONTRACT NO. 2
PLAN AND PROFILE
FIDDLERS GREEN
BRANCH 2 OF2

D&K PROJECT #	PROJ. ENG.
227947	JBA
DRAWN BY	CHECKED BY
EBS	DDC

DATE
JULY 2026

SHEET NUMBER
C40

SHEET: 45 of 86

I:\21\227947 Waitsfield Water and Wastewater Feasibility Stud\Drawings\Civil\Sheet Breakouts\227947-BDR-BRANCH.dwg 8/27/2026 11:16 AM

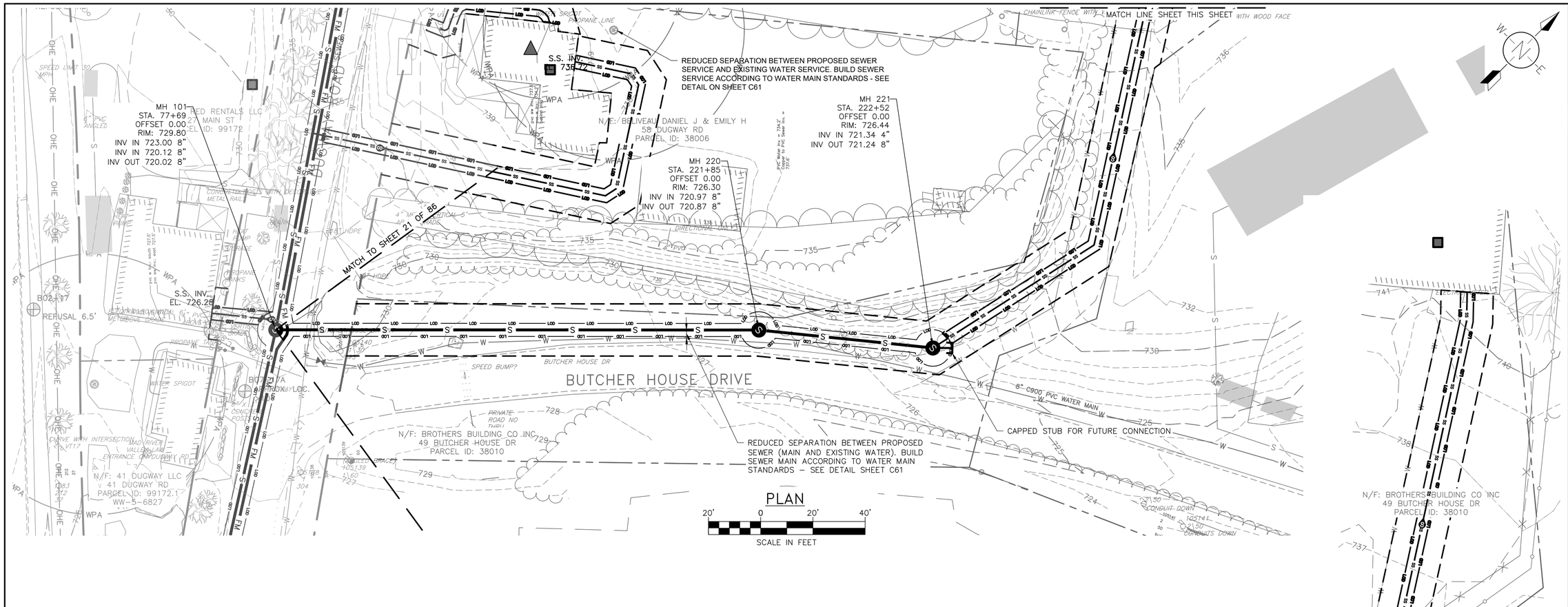

PARCEL 38010
SERVICE

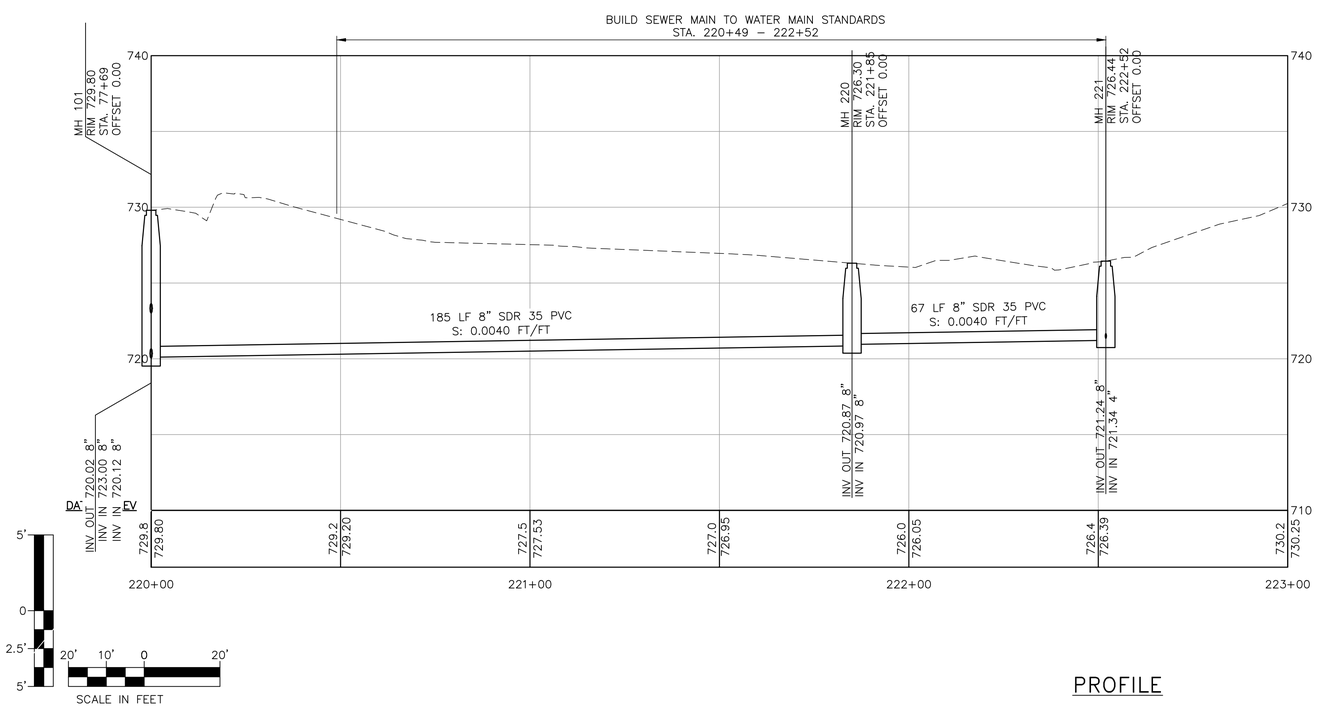

PROFILE

BID SET
NOT FOR CONSTRUCTION 7/16/2026

DuBois & King inc.
www.dubois-king.com
© Copyright 2026 DuBois & King inc.

STATE OF VERMONT
BID SET
NOT FOR CONSTRUCTION
07-16-2026

REVISIONS			
NUMBER	DATE	REVISION DESCRIPTION	BY

CLIENT NAME
TOWN OF WAITSFIELD

PROJECT NAME
WAITSFIELD COMMUNITY WASTEWATER SYSTEM

PROJECT ADDRESS
4144 MAIN STREET
WAITSFIELD, VERMONT 05673

SHEET TITLE
CONTRACT NO. 2
PLAN AND PROFILE
BUTCHER HOUSE DRIVE

D&K PROJECT #	PROJ. ENG.
227947	JBA
DRAWN BY	CHECKED BY
EBS	DDC

DATE
JULY 2026

SHEET NUMBER
C41

SHEET: 46 of 86

I:\2\227947 Waitsfield Water and Wastewater Feasibility Stud\Drawings\Civil\Sheet Breakouts\227947-BDR-BRANCH.dwg 8/27/2026 11:18 AM

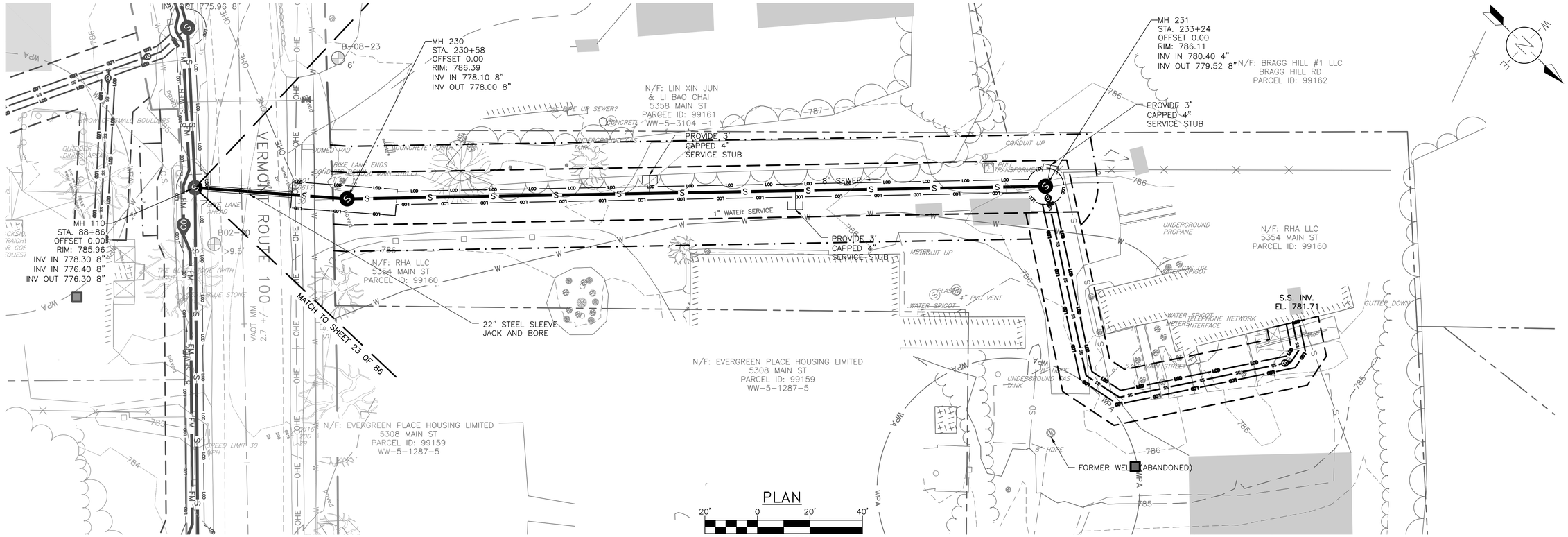

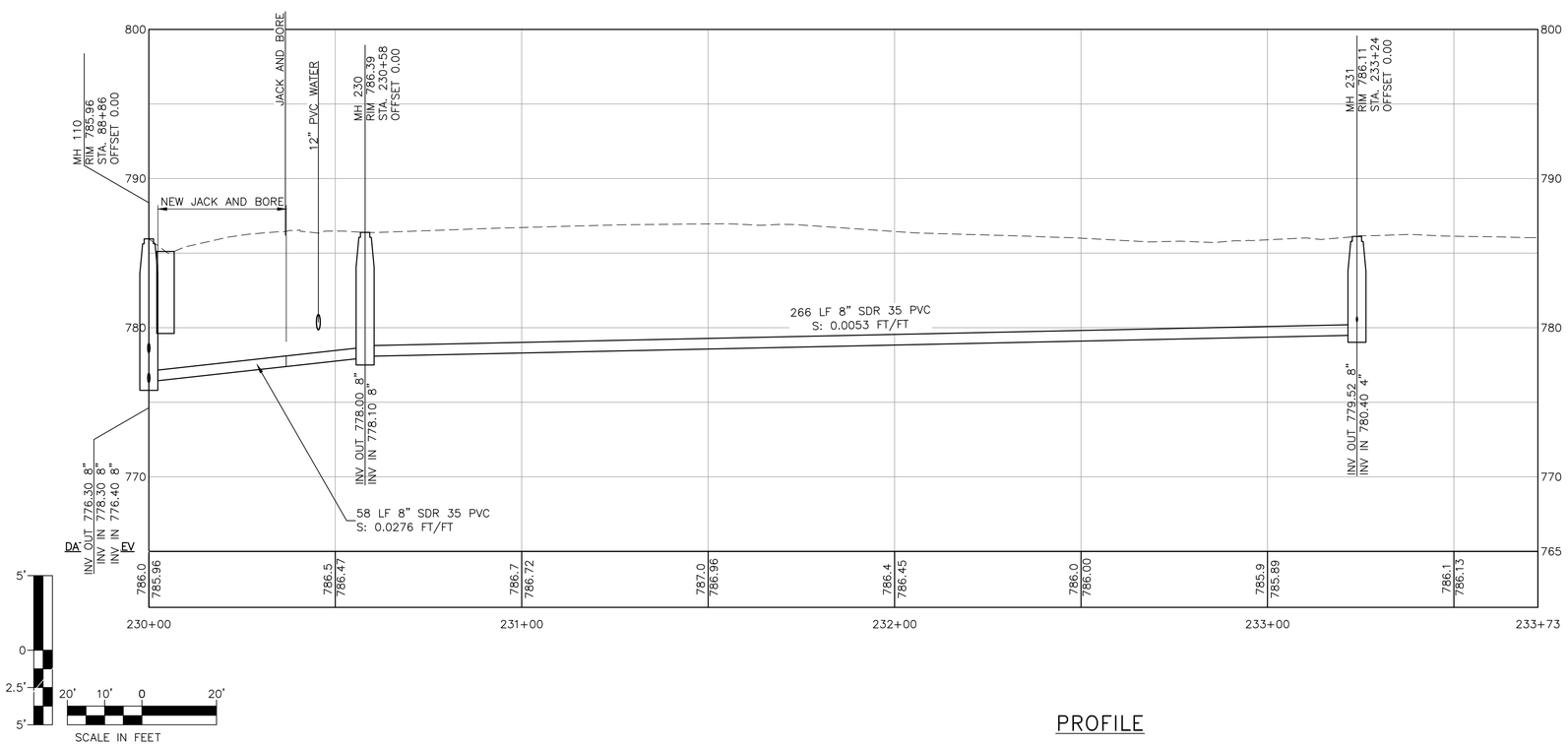

PROFILE

BID SET
NOT FOR CONSTRUCTION 7/16/2026

DuBois & King inc.
www.dubois-king.com
© Copyright 2026 DuBois & King inc.

STATE OF VERMONT
DAVID A. BOUCHARD
ASHLEY R. BOUCHARD
PROFESSIONAL ENGINEER
07-16-2026

BID SET
NOT FOR CONSTRUCTION

REVISIONS

NUMBER	DATE	REVISION DESCRIPTION	BY

CLIENT NAME
TOWN OF WAITSFIELD

PROJECT NAME
WAITSFIELD COMMUNITY WASTEWATER SYSTEM

PROJECT ADDRESS
4144 MAIN STREET
WAITSFIELD, VERMONT 05673

SHEET TITLE
CONTRACT NO. 2
PLAN AND PROFILE
IRASVILLE NORTH BRANCH

D&K PROJECT #	PROJ. ENG.
227947	JBA
DRAWN BY	CHECKED BY
EBS	DDC

DATE
JULY 2026

SHEET NUMBER
C42

SHEET: 47 of 86

I:\21\227947 Waitsfield Water and Wastewater Feasibility Stud\Drawings\Civil\Sheet Breakouts\227947-BDR-BRANCH.dwg 8/27/2026 11:18 AM

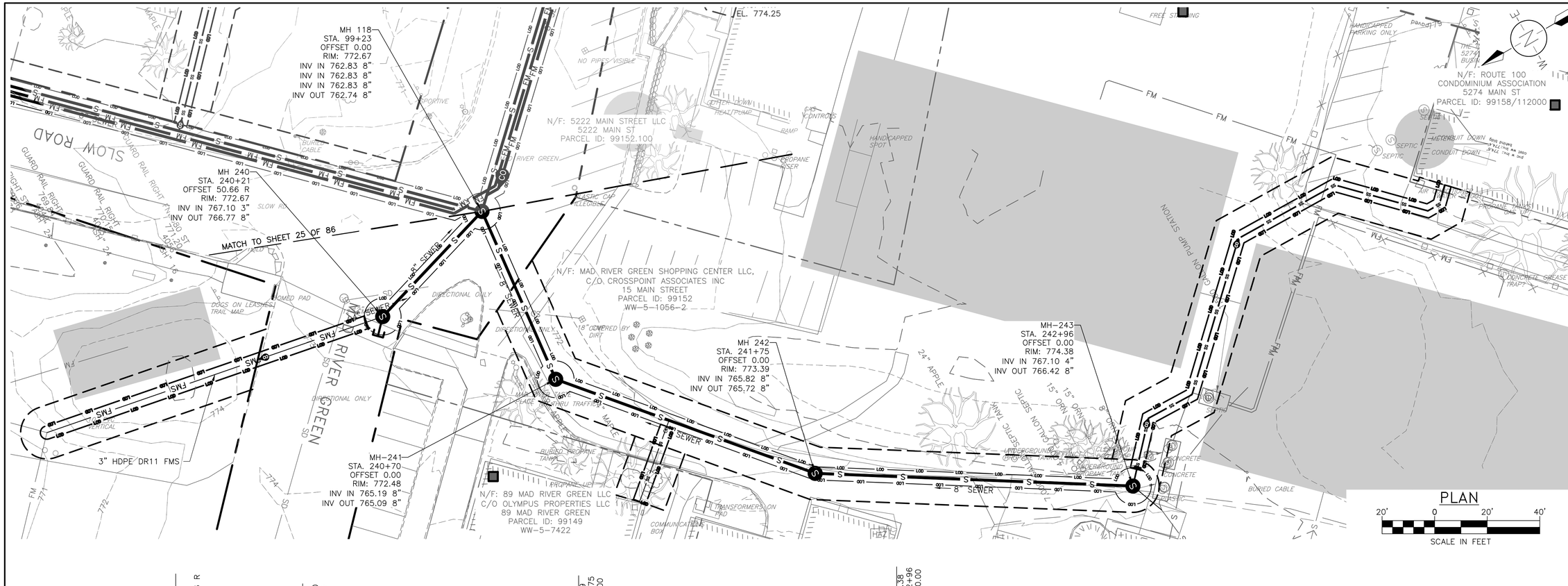

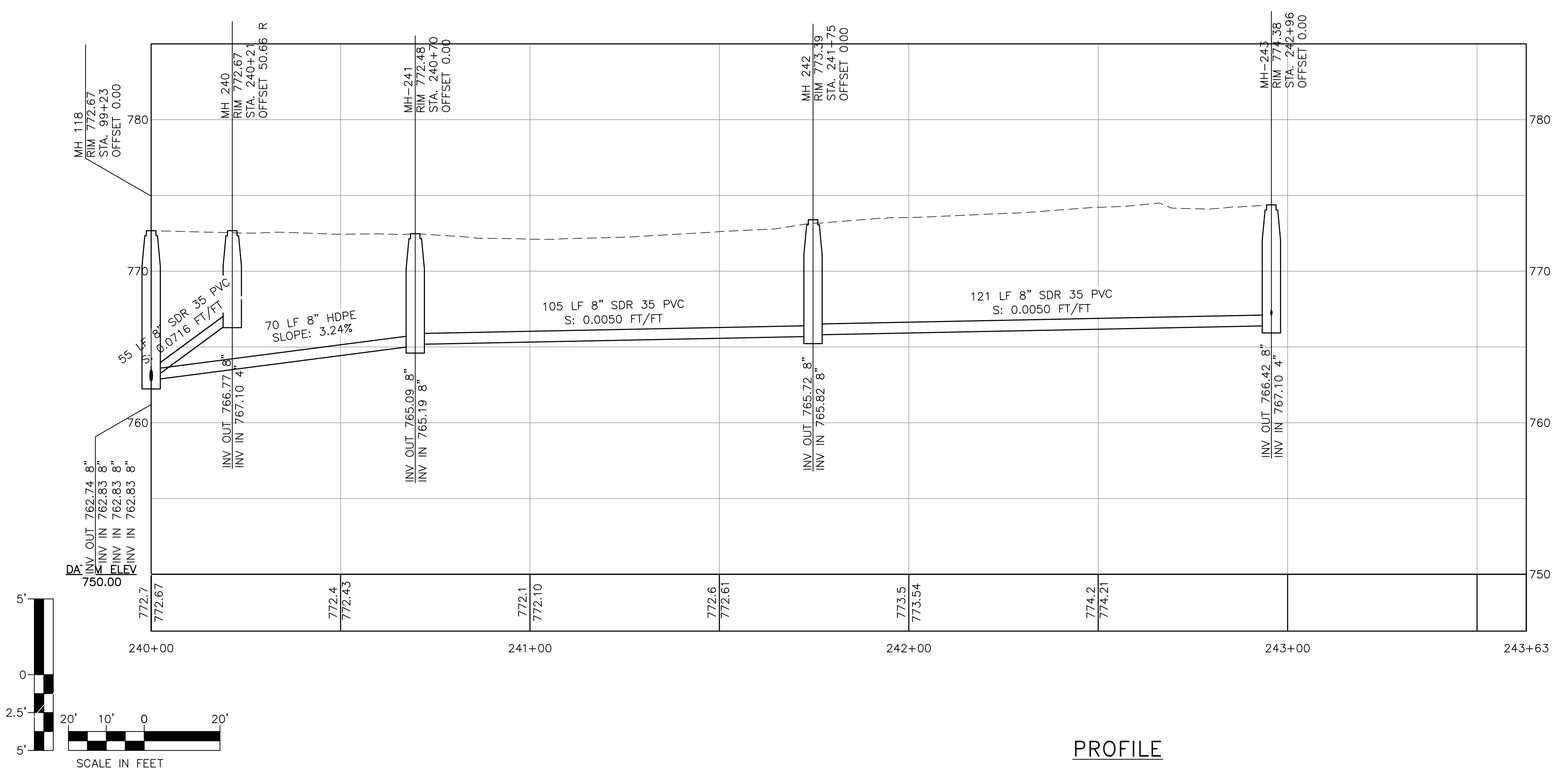

PROFILE

BID SET
NOT FOR CONSTRUCTION 7/16/2026

DuBois & King inc.

www.dubois-king.com

© Copyright 2026 DuBois & King inc.

STATE OF VERMONT
ASHLEY B. CARTER
PROFESSIONAL ENGINEER
07-16-2026

BID SET
NOT FOR CONSTRUCTION

REVISIONS

NUMBER	DATE	REVISION DESCRIPTION	BY

CLIENT NAME
TOWN OF WAITSFIELD

PROJECT NAME
WAITSFIELD COMMUNITY WASTEWATER SYSTEM

PROJECT ADDRESS
4144 MAIN STREET
WAITSFIELD, VERMONT 05673

SHEET TITLE
CONTRACT NO. 2
PLAN AND PROFILE
MAD RIVER GREEN BRANCH

D&K PROJECT #	PROJ. ENG.
227947	JBA
DRAWN BY	CHECKED BY
EBS	DDC

DATE
JULY 2026

SHEET NUMBER
C43

SHEET: 48 of 86

I:\2\227947 Waitsfield Water and Wastewater Feasibility Stud\Drawings\Civil\Sheet Breakouts\227947-BDR-BRANCH.dwg 8/27/2026 11:19 AM

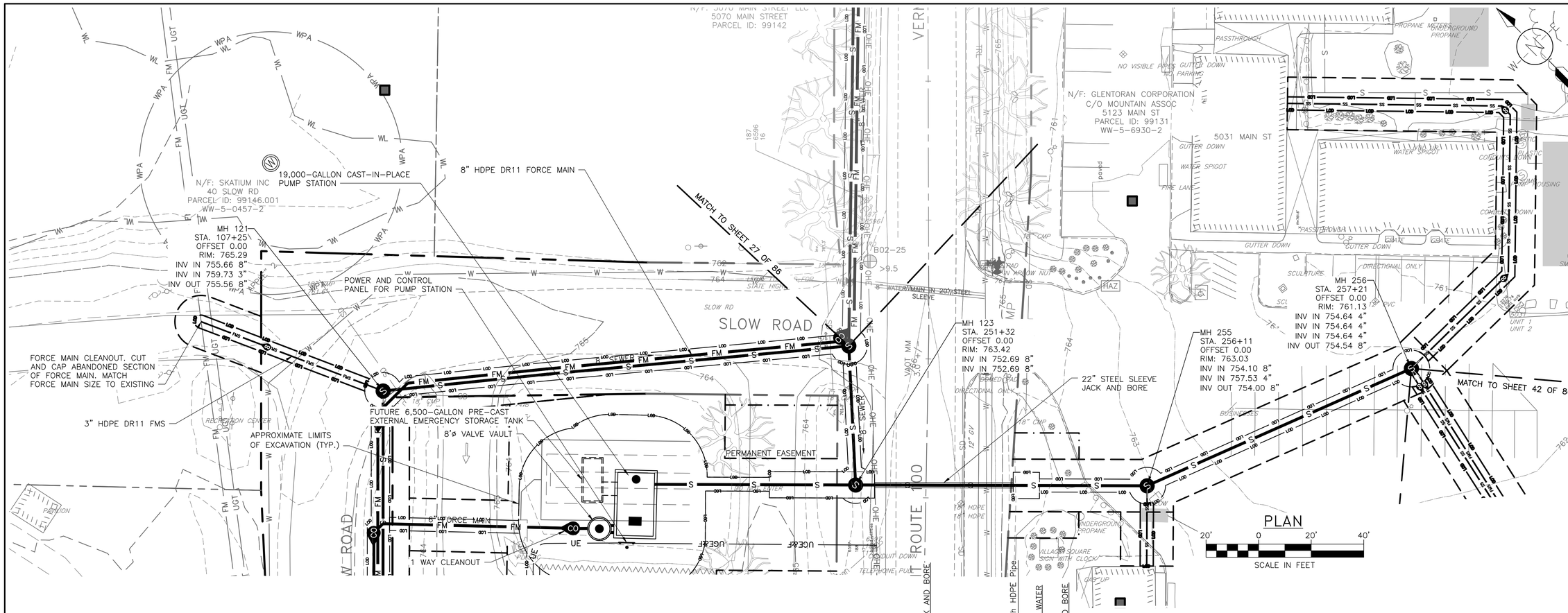

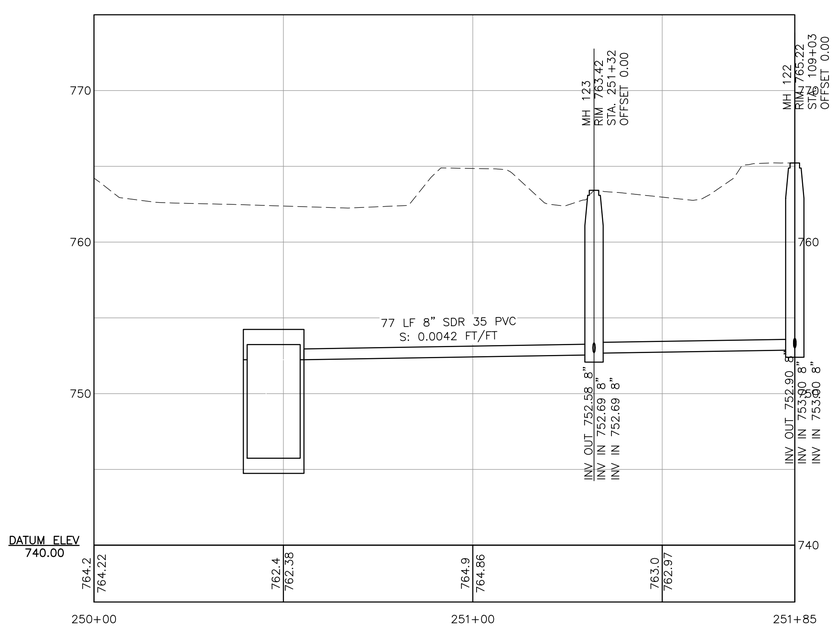

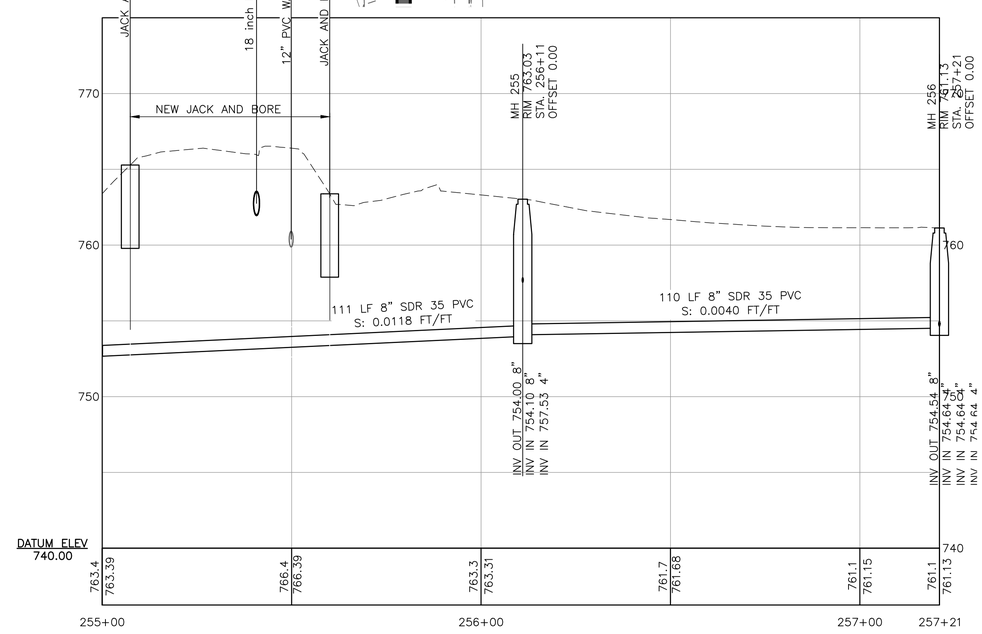

PROFILE

SCALE IN FEET

BID SET
NOT FOR CONSTRUCTION 7/16/2026

DuBois & King inc.
www.dubois-king.com
© Copyright 2026 DuBois & King inc.

STATE OF VERMONT
BID SET
NOT FOR
CONSTRUCTION
07-16-2026

REVISIONS			
NUMBER	DATE	REVISION DESCRIPTION	BY

CLIENT NAME
TOWN OF WAITSFIELD

PROJECT NAME
WAITSFIELD COMMUNITY WASTEWATER SYSTEM

PROJECT ADDRESS
4144 MAIN STREET
WAITSFIELD, VERMONT 05673

SHEET TITLE
CONTRACT NO. 2
PLAN AND PROFILE
SLOW ROAD BRANCH

D&K PROJECT #	PROJ. ENG.
227947	JBA
DRAWN BY	CHECKED BY
EBS	DDC

DATE
JULY 2026

SHEET NUMBER
C44

SHEET: 49 of 86

I:\2\227947 Waitsfield Water and Wastewater Feasibility Stud\Drawings\Civil\Sheet Breakouts\227947-BDR-BRANCH.dwg 8/27/2026 11:21 AM

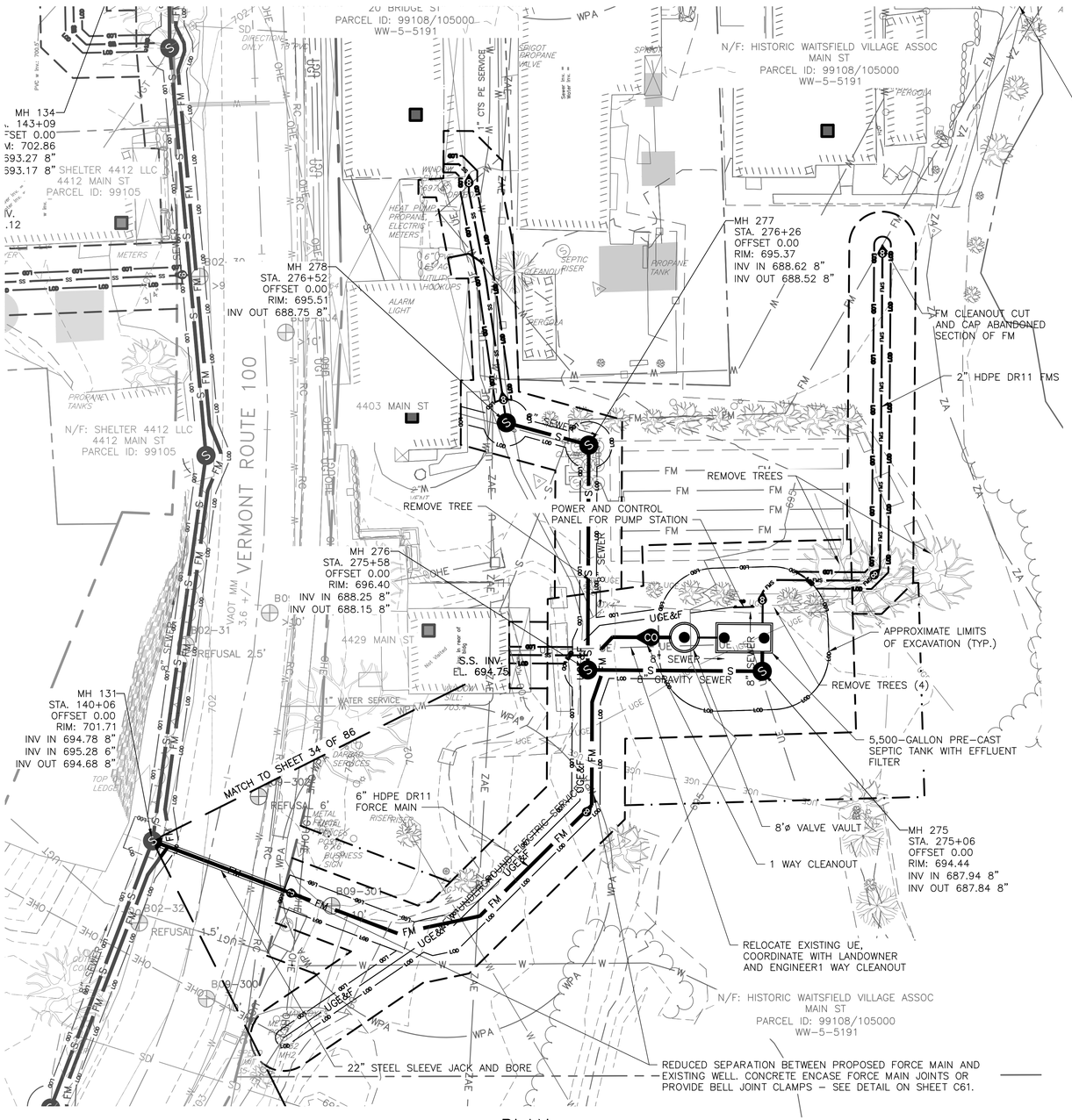

PLAN

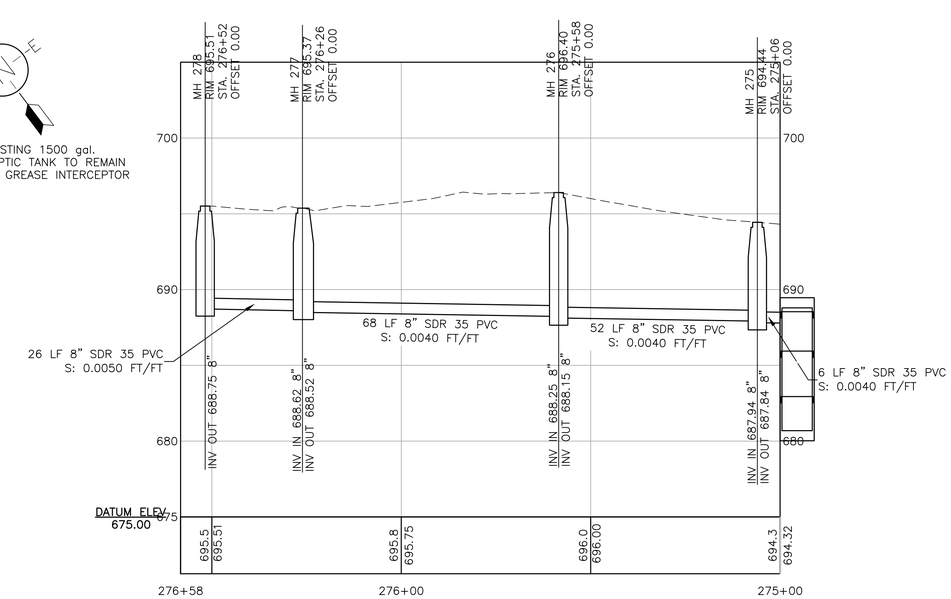

GRAVITY SEWER PROFILE

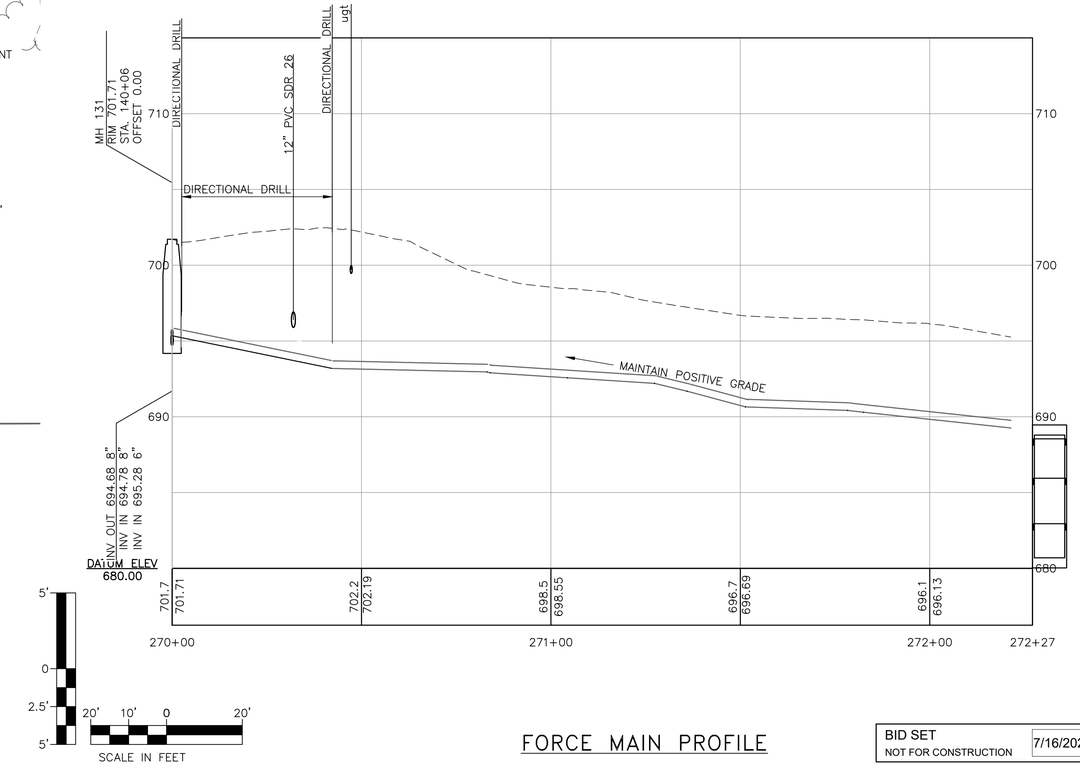

FORCE MAIN PROFILE

BID SET
NOT FOR CONSTRUCTION
7/16/2026

DuBois & King inc.
www.dubois-king.com
© Copyright 2026 DuBois & King inc.

STATE OF VERMONT
ASHLEY B. BOUCHARD
PROFESSIONAL ENGINEER
BID SET
NOT FOR CONSTRUCTION
07-16-2026

REVISIONS

NUMBER	DATE	REVISION DESCRIPTION	BY

CLIENT NAME
TOWN OF WAITSFIELD

PROJECT NAME
WAITSFIELD COMMUNITY WASTEWATER SYSTEM

PROJECT ADDRESS
4144 MAIN STREET
WAITSFIELD, VERMONT 05673

SHEET TITLE
CONTRACT NO. 2
PLAN AND PROFILE
BRIDGE STREET
SOUTH BRANCH

D&K PROJECT #	PROJ. ENG.
227947	JBA
DRAWN BY	CHECKED BY
EBS	DDC

DATE
JULY 2026

SHEET NUMBER
C45

SHEET: 50 of 86

I:\2\227947 Waitsfield Water and Wastewater Feasibility Stud\Drawings\Civil\Sheet Breakouts\227947-BDR-BRANCH.dwg 8/27/2026 11:22 AM

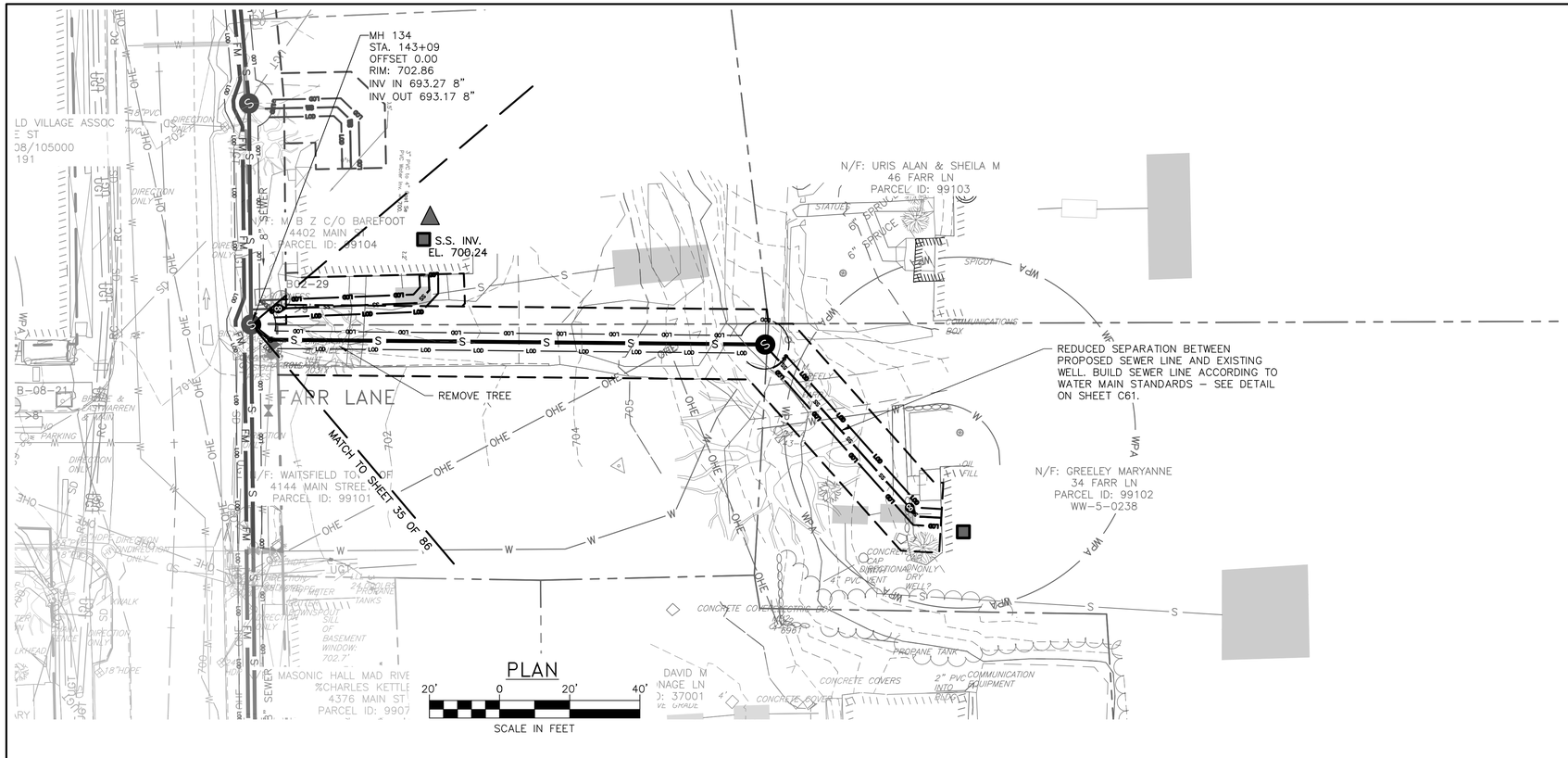

PLAN

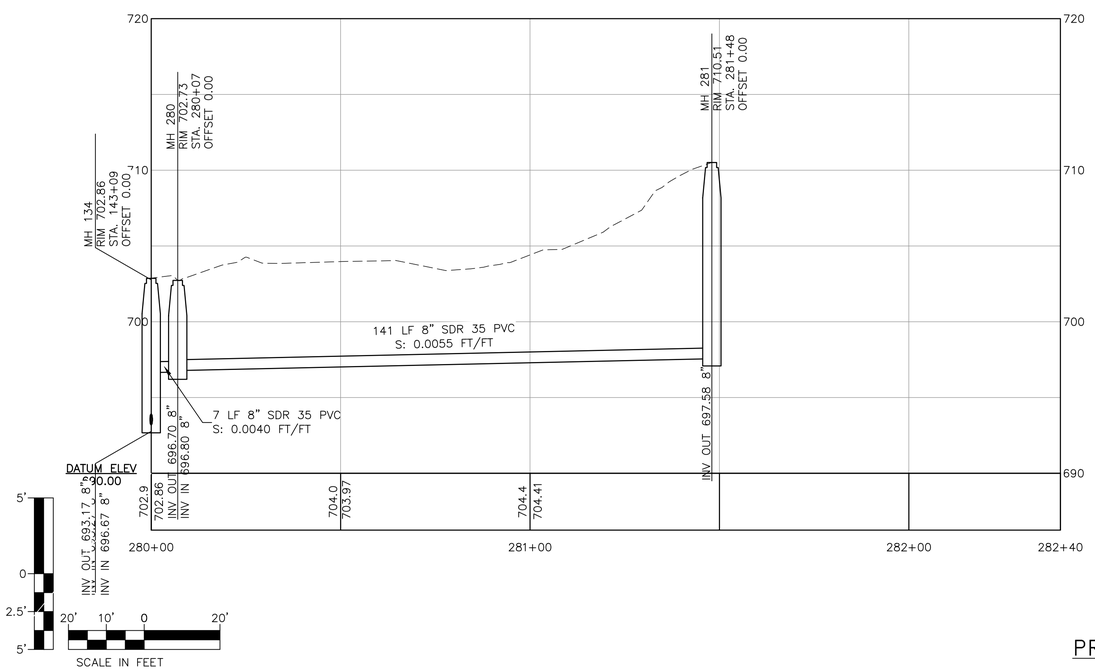

PROFILE

BID SET
NOT FOR CONSTRUCTION 7/16/2026

DuBois & King inc.
www.dubois-king.com
© Copyright 2026 DuBois & King inc.

BID SET
NOT FOR CONSTRUCTION
07-16-2026

REVISIONS

NUMBER	DATE	REVISION DESCRIPTION	BY

CLIENT NAME
TOWN OF WAITSFIELD

PROJECT NAME
WAITSFIELD COMMUNITY WASTEWATER SYSTEM

PROJECT ADDRESS
4144 MAIN STREET
WAITSFIELD, VERMONT 05673

SHEET TITLE
CONTRACT NO. 2
PLAN AND PROFILE
FARR LANE BRANCH

D&K PROJECT #	PROJ. ENG.
227947	JBA
DRAWN BY	CHECKED BY
EBS	DDC

DATE
JULY 2026

SHEET NUMBER
C46

SHEET: 51 of 86

I:\227947 Waitsfield Water and Wastewater Feasibility Stud\Drawings\Civil\Sheet Breakouts\227947-BDR-BRANCH.dwg 8/27/2026 11:23 AM

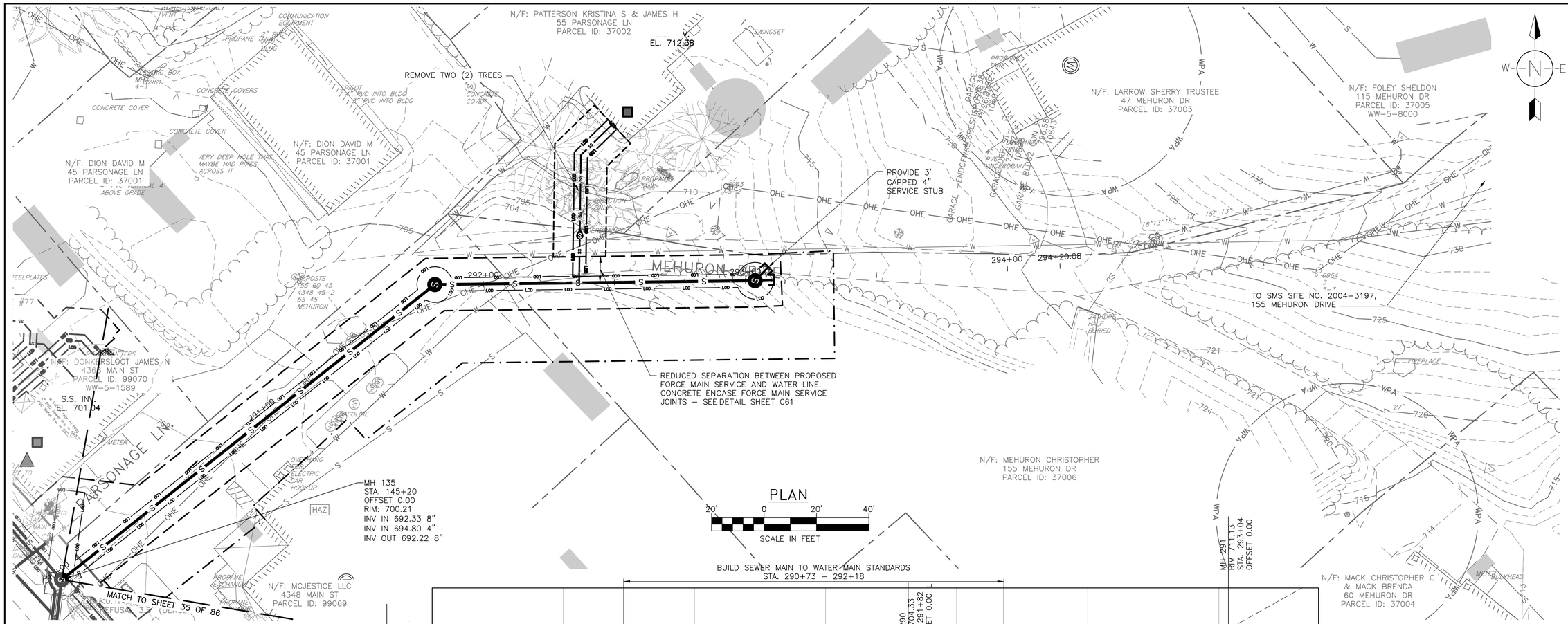

PLAN

20' 0 20' 40'
SCALE IN FEET

BUILD SEWER MAIN TO WATER MAIN STANDARDS
STA. 290+73 – 292+18

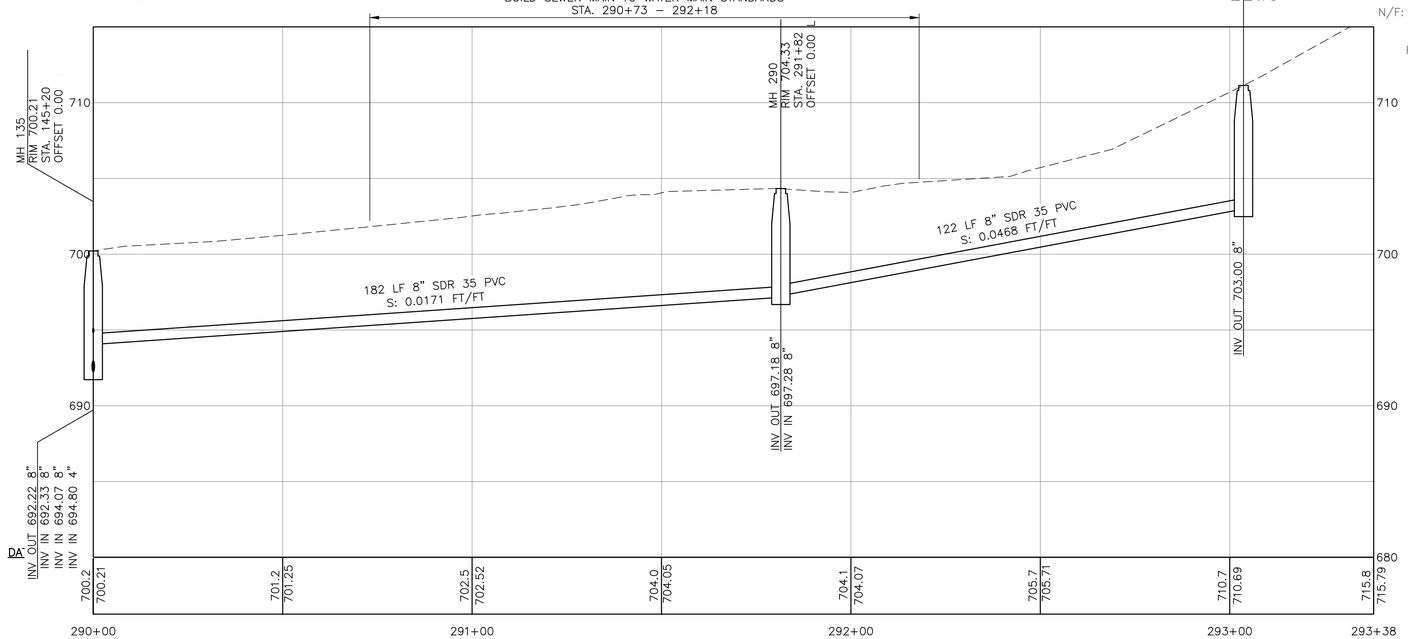

PROFILE

5' 0 2.5' 5'
20' 10' 0 20'
SCALE IN FEET

BID SET
NOT FOR CONSTRUCTION 7/16/2026

DuBois & King inc.
www.dubois-king.com
© Copyright 2026 DuBois & King inc.

STATE OF VERMONT
ASHLEY D. CLEMENS
PROFESSIONAL ENGINEER
07-16-2026
BID SET
NOT FOR CONSTRUCTION

REVISIONS			
NUMBER	DATE	REVISION DESCRIPTION	BY

CLIENT NAME
TOWN OF WAITSFIELD

PROJECT NAME
WAITSFIELD COMMUNITY WASTEWATER SYSTEM

PROJECT ADDRESS
4144 MAIN STREET
WAITSFIELD, VERMONT 05673

SHEET TITLE
CONTRACT NO. 2
PLAN AND PROFILE
PARSONAGE LANE BRANCH

D&K PROJECT #	PROJ. ENG.
227947	JBA
DRAWN BY	CHECKED BY
EBS	DDC

DATE
JULY 2026

SHEET NUMBER
C47

SHEET: 52 of 86

I:\227947 Waitsfield Water and Wastewater Feasibility Stud\Drawings\Civil\Sheet Breakouts\227947-BDR-BRANCH.dwg 8/27/2026 11:24 AM

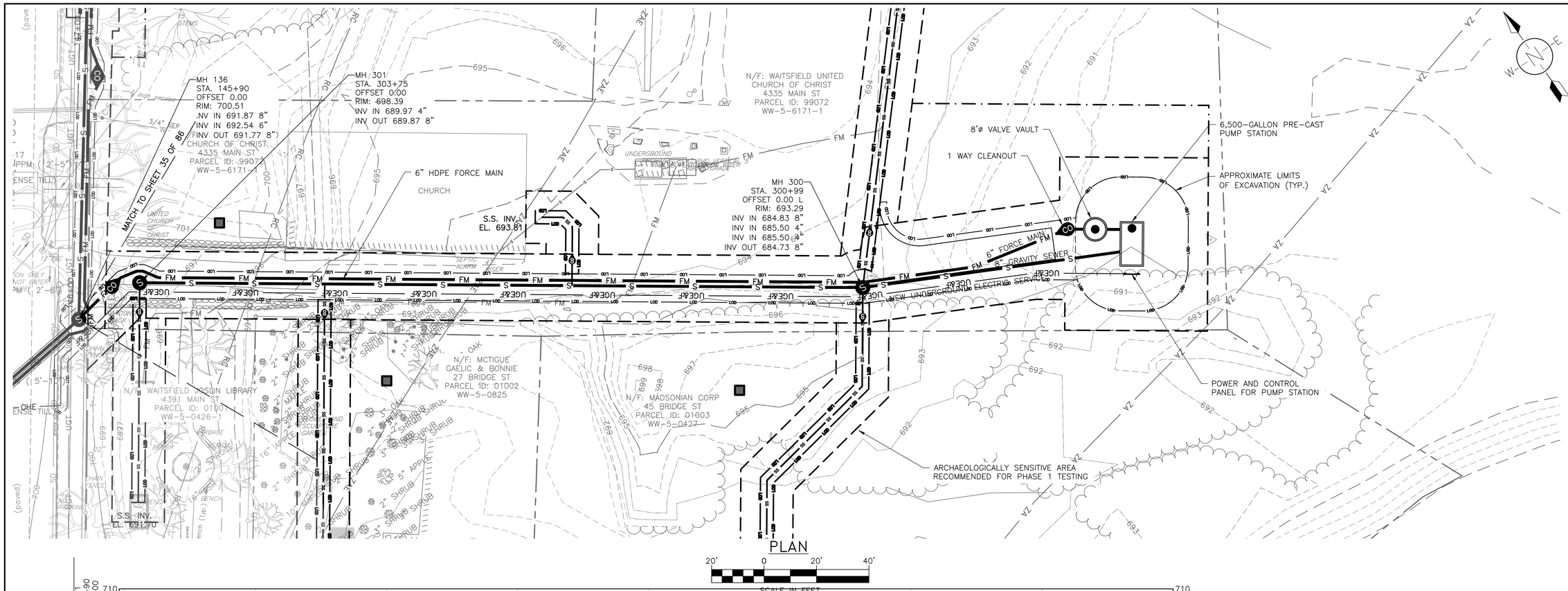

PLAN

20' 0 20' 40'

SCALE IN FEET

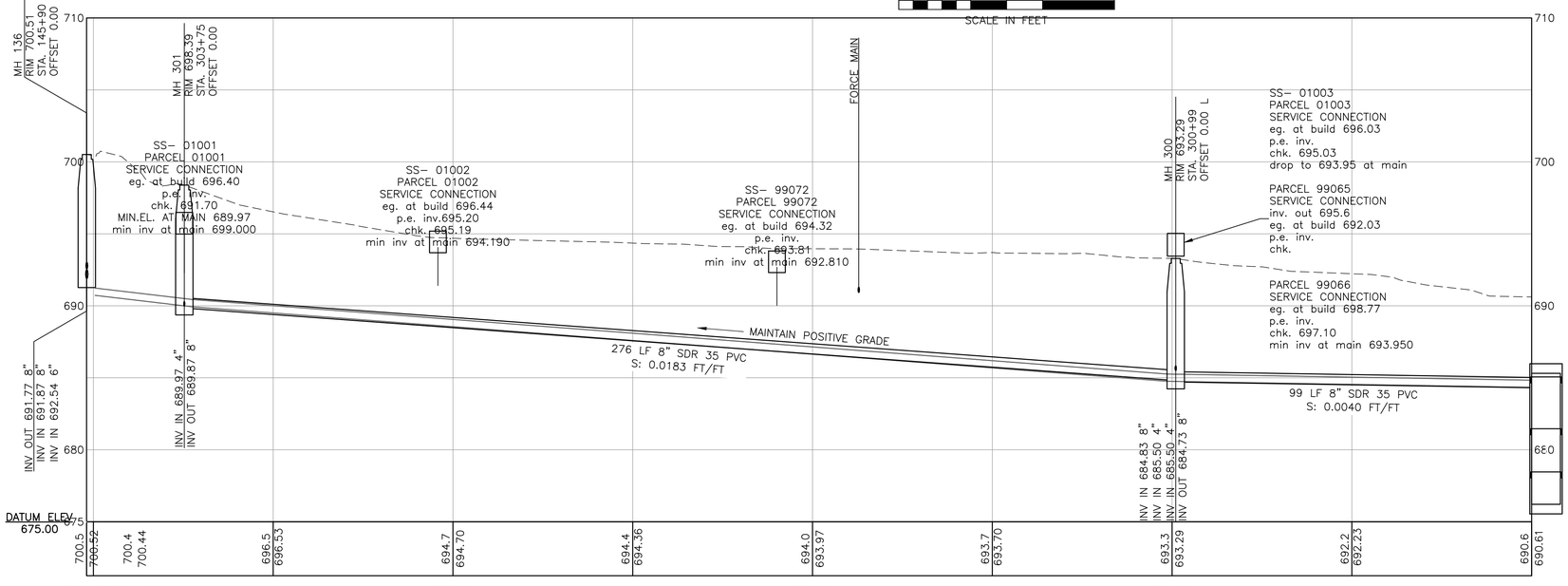

PROFILE

5' 0 2.5' 5'

20' 10' 0 20'

SCALE IN FEET

BID SET
NOT FOR CONSTRUCTION 7/16/2026

DuBois & King inc.

www.dubois-king.com

© Copyright 2026 DuBois & King inc.

STATE OF VERMONT
JAMES B. ASHE
PROFESSIONAL ENGINEER
07-16-2026

BID SET
NOT FOR CONSTRUCTION

REVISIONS			
NUMBER	DATE	REVISION DESCRIPTION	BY

CLIENT NAME
TOWN OF WAITSFIELD

PROJECT NAME
WAITSFIELD COMMUNITY WASTEWATER SYSTEM

PROJECT ADDRESS
4144 MAIN STREET
WAITSFIELD, VERMONT 05673

SHEET TITLE
CONTRACT NO. 2
PLAN AND PROFILE
CHURCH BRANCH

D&K PROJECT #	PROJ. ENG.
227947	JBA
DRAWN BY	CHECKED BY
EBS	DDC

DATE
JULY 2026

SHEET NUMBER
C48

I:\227947 Waitsfield Water and Wastewater Feasibility Stud\Drawings\Civil\Sheet Breakouts\227947-BDR-BRANCH-2.dwg 8/27/2026 11:26 AM

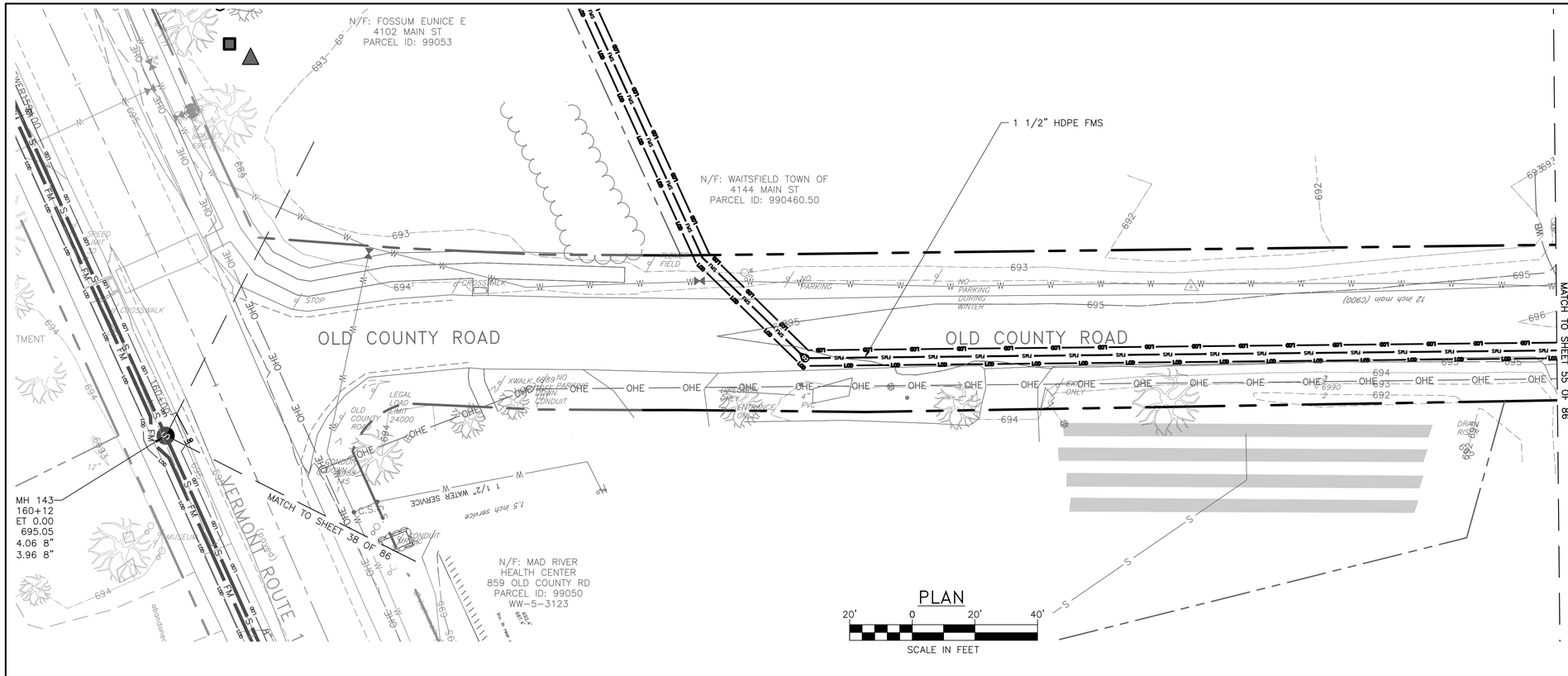

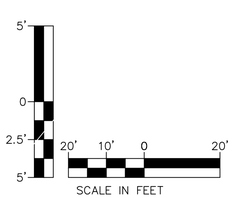

BID SET
NOT FOR CONSTRUCTION
7/16/2026

DuBois & King inc.
www.dubois-king.com
© Copyright 2026 DuBois & King inc.

STATE OF VERMONT
ASHLEY B. BRUNELLE
PROFESSIONAL ENGINEER
07-16-2026
BID SET
NOT FOR CONSTRUCTION

REVISIONS			
NUMBER	DATE	REVISION DESCRIPTION	BY

CLIENT NAME
TOWN OF WAITSFIELD

PROJECT NAME
WAITSFIELD COMMUNITY WASTEWATER SYSTEM

PROJECT ADDRESS
4144 MAIN STREET
WAITSFIELD, VERMONT 05673

SHEET TITLE
CONTRACT NO. 2
PLAN AND PROFILE
OLD COUNTY ROAD
1 OF 2

D&K PROJECT #	PROJ. ENG.
227947	JBA
DRAWN BY	CHECKED BY
EBS	DDC

DATE
JULY 2026

SHEET NUMBER
C49

SHEET: 54 of 86

I:\2\227947 Waitsfield Water and Wastewater Feasibility Stud\Drawings\Civil\Sheet Breakouts\227947-BDR-BRANCH-2.dwg 8/27/2026 11:26 AM

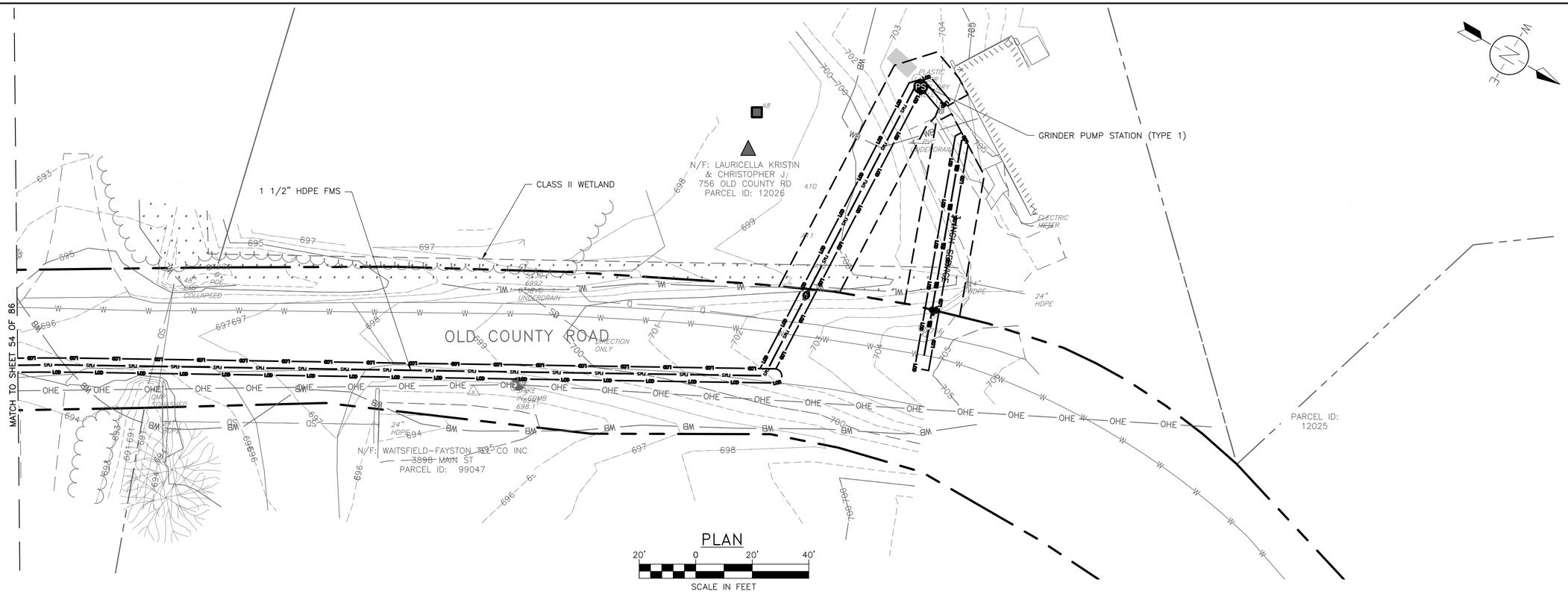

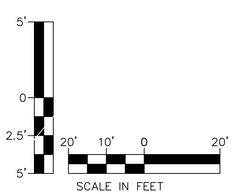

BID SET
NOT FOR CONSTRUCTION 7/16/2026

DuBois & King inc.
www.dubois-king.com
© Copyright 2026 DuBois & King inc.

STATE OF VERMONT
ASHLEY B. DUBOIS
PROFESSIONAL ENGINEER
07-16-2026

BID SET
NOT FOR CONSTRUCTION

REVISIONS

NUMBER	DATE	REVISION DESCRIPTION	BY

CLIENT NAME
TOWN OF WAITSFIELD

PROJECT NAME
WAITSFIELD COMMUNITY WASTEWATER SYSTEM

PROJECT ADDRESS
4144 MAIN STREET
WAITSFIELD, VERMONT 05673

SHEET TITLE
CONTRACT NO. 2
PLAN AND PROFILE
OLD COUNTY ROAD
2 OF 2

D&K PROJECT #	PROJ. ENG.
227947	JBA
DRAWN BY	CHECKED BY
EBS	DDC

DATE
JULY 2026

SHEET NUMBER
C50

SHEET: 55 of 86

I:\2\227947 Waitsfield Water and Wastewater Feasibility Stud\Drawings\Civil\Sheet Breakouts\227947-BDR-BRANCH-2.dwg 8/27/2026 11:27 AM

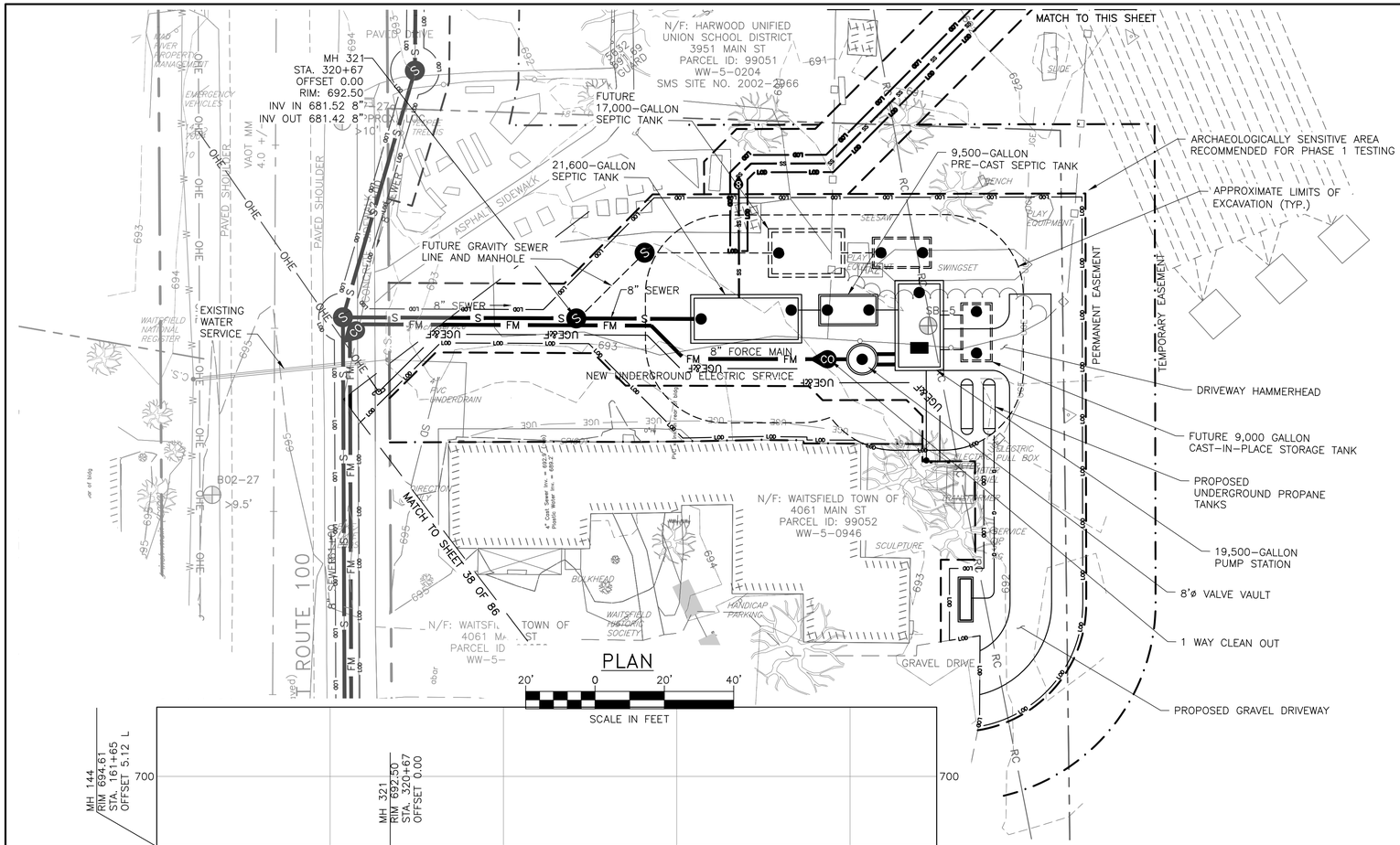

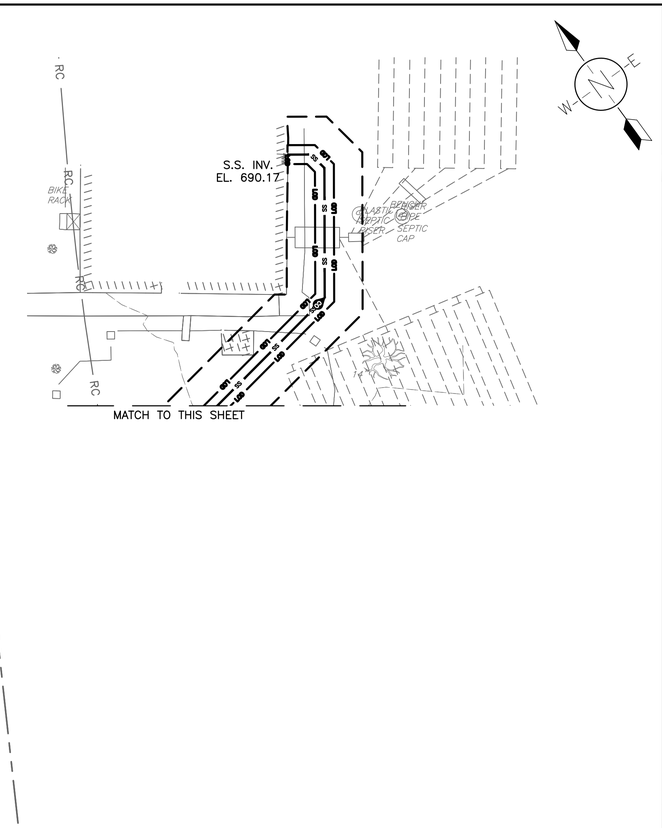

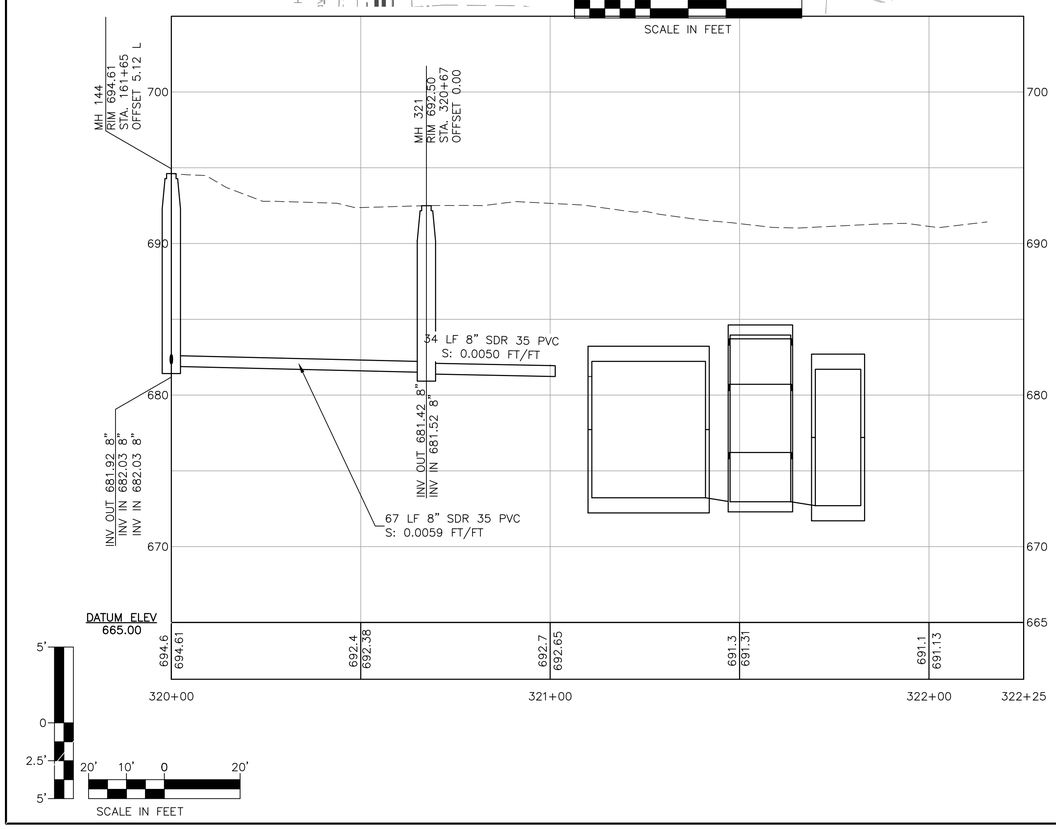

BID SET
NOT FOR CONSTRUCTION 7/16/2026

DuBois & King inc.
www.dubois-king.com
© Copyright 2026 DuBois & King inc.

STATE OF VERMONT
BID SET
NOT FOR CONSTRUCTION
07-16-2026

REVISIONS

NUMBER	DATE	REVISION DESCRIPTION	BY

CLIENT NAME
TOWN OF WAITSFIELD

PROJECT NAME
WAITSFIELD COMMUNITY WASTEWATER SYSTEM

PROJECT ADDRESS
4144 MAIN STREET
WAITSFIELD, VERMONT 05673

SHEET TITLE
CONTRACT NO. 2
PLAN AND PROFILE
SCHOOL PUMP STATION BRANCH

D&K PROJECT #	PROJ. ENG.
227947	JBA
DRAWN BY	CHECKED BY
EBS	DDC

DATE
JULY 2026

SHEET NUMBER
C51

SHEET: 56 of 86

I:\2\227947 Waitsfield Water and Wastewater Feasibility Stud\Drawings\Civil\Sheet Breakouts\227947-BDR-BRANCH-2.dwg 8/27/2026 11:28 AM

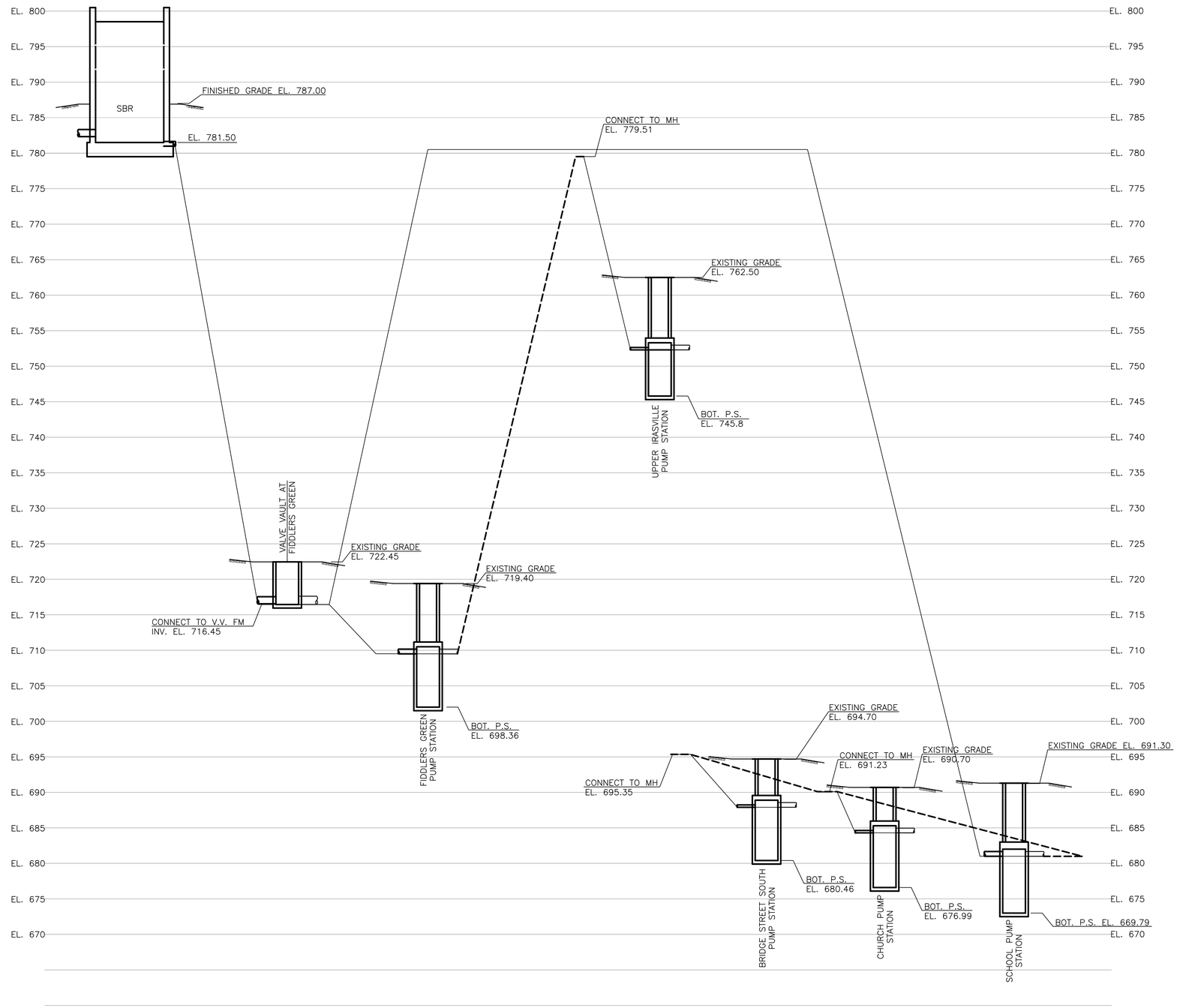

SCALE:
HORIZONTAL: NOT TO SCALE
VERTICAL: 1" = 8'-0"

BID SET
NOT FOR CONSTRUCTION 7/16/2026

DuBois & King inc.
www.dubois-king.com
© Copyright 2026 DuBois & King inc.

BID SET
NOT FOR CONSTRUCTION

REVISIONS

NUMBER	DATE	REVISION DESCRIPTION	BY

CLIENT NAME
TOWN OF WAITSFIELD

PROJECT NAME
WAITSFIELD COMMUNITY WASTEWATER SYSTEM

PROJECT ADDRESS
4144 MAIN STREET
WAITSFIELD, VERMONT 05673

SHEET TITLE
CONTRACT NO. 2

HYDRAULIC PROFILE

D&K PROJECT #	PROJ. ENG.
227947	JBA
DRAWN BY	CHECKED BY
EBS	DDC

DATE
JULY 2026

SHEET NUMBER
C52

SHEET: 57 of 86

I:\2\227947 Waitsfield Water and Wastewater Feasibility Stud\Drawings\Civil\220854P-HYD-PROF.dwg 8/27/2026 11:28 AM

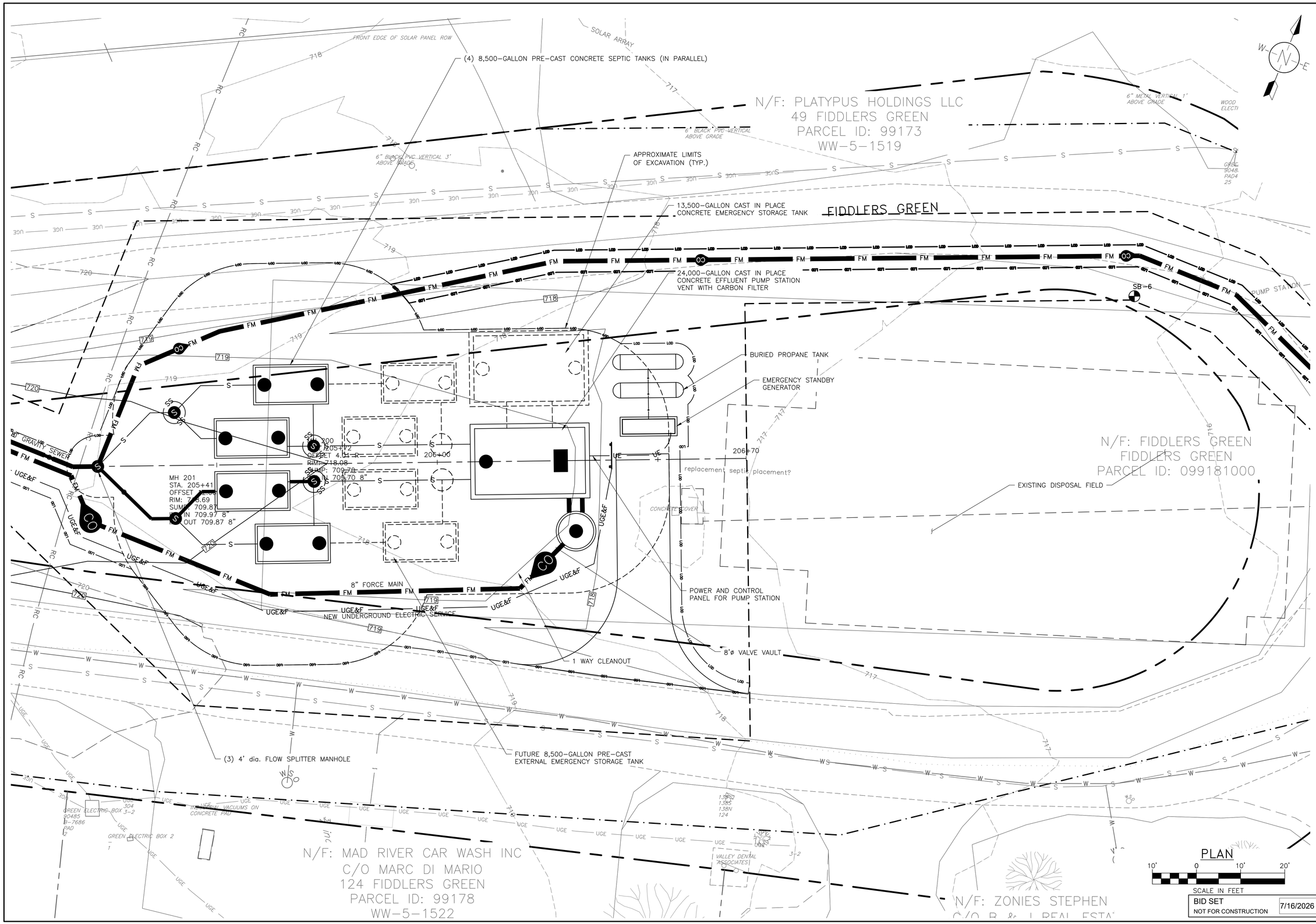

BID SET
NOT FOR CONSTRUCTION
7/16/2026

DuBois & King inc.
www.dubois-king.com
© Copyright 2026 DuBois & King inc.

STATE OF VERMONT
ASHLEY E. BOSTWICK
PROFESSIONAL ENGINEER
07-16-2026

REVISIONS

NUMBER	DATE	REVISION DESCRIPTION	BY

CLIENT NAME
TOWN OF WAITSFIELD

PROJECT NAME
WAITSFIELD COMMUNITY WASTEWATER SYSTEM

PROJECT ADDRESS
4144 MAIN STREET
WAITSFIELD, VERMONT 05673

SHEET TITLE
CONTRACT NO. 2

FIDDLERS GREEN PUMP STATION

D&K PROJECT #	PROJ. ENG.
227947	JBA
DRAWN BY	CHECKED BY
EBS	DDC

DATE
JULY 2026

SHEET NUMBER
C53

SHEET: 58 of 86

I:\2\227947 Waitsfield Water and Wastewater Feasibility Stud\Drawings\Civil\Sheet Breakouts\227947-BDR-P-S.dwg 8/27/2026 11:29 AM

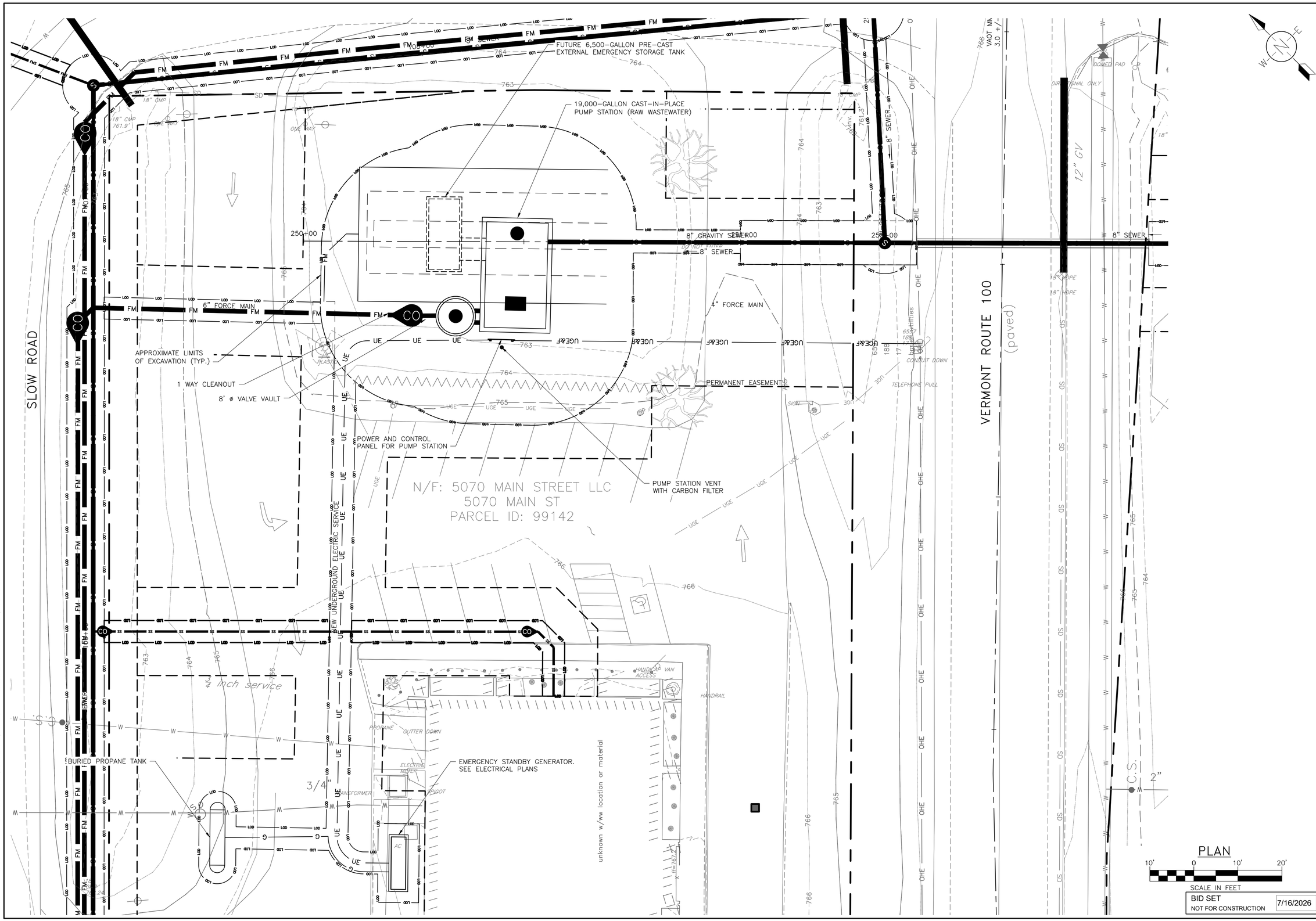

DuBois & King inc.

www.dubois-king.com

© Copyright 2026 DuBois & King inc.

STATE OF VERMONT
ASHLEY E. BOUCHARD
PROFESSIONAL ENGINEER
07-16-2026

BID SET NOT FOR CONSTRUCTION

REVISIONS			
NUMBER	DATE	REVISION DESCRIPTION	BY

CLIENT NAME
TOWN OF WAITSFIELD

PROJECT NAME
WAITSFIELD COMMUNITY WASTEWATER SYSTEM

PROJECT ADDRESS
4144 MAIN STREET
WAITSFIELD, VERMONT 05673

SHEET TITLE
CONTRACT NO. 2

UPPER IRASVILLE PUMP STATION

D&K PROJECT #	PROJ. ENG.
227947	JBA
DRAWN BY	CHECKED BY
EBS	DDC

DATE
JULY 2026

SHEET NUMBER
C54

SHEET: 59 of 86

I:\2\227947 Waitsfield Water and Wastewater Feasibility Stud\Drawings\Civil\Sheet Breakouts\227947-BDR-P-S.dwg 8/27/2026 11:30 AM

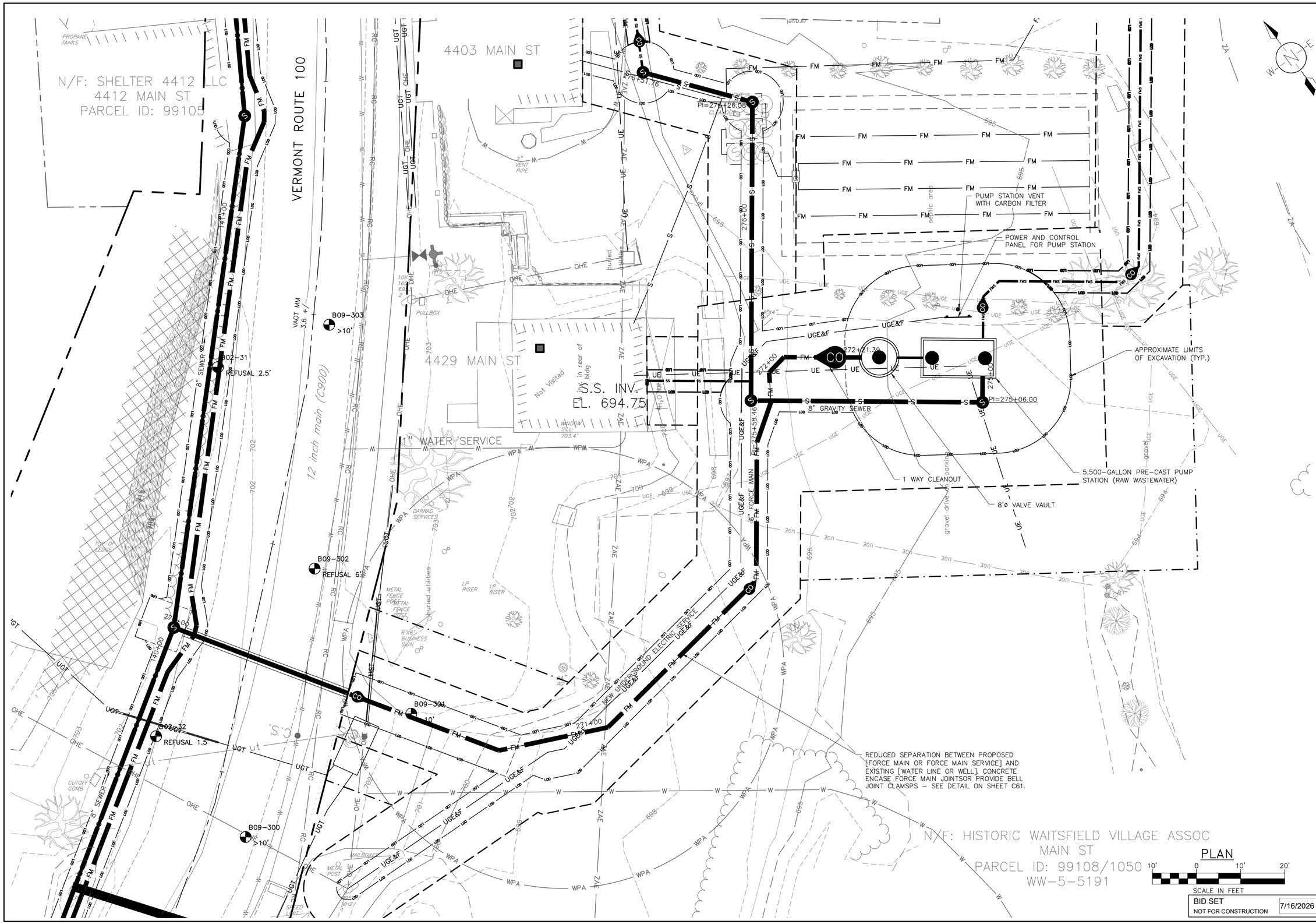

DuBois & King inc.

www.dubois-king.com

© Copyright 2026 DuBois & King inc.

BID SET
NOT FOR CONSTRUCTION

REVISIONS			
NUMBER	DATE	REVISION DESCRIPTION	BY

CLIENT NAME
TOWN OF WAITSFIELD

PROJECT NAME
WAITSFIELD COMMUNITY WASTEWATER SYSTEM

PROJECT ADDRESS
4144 MAIN STREET
WAITSFIELD, VERMONT 05673

SHEET TITLE
CONTRACT NO. 2
BRIDGE STREET SOUTH PUMP STATION

D&K PROJECT #	PROJ. ENG.
227947	JBA
DRAWN BY	CHECKED BY
EBS	DDC

DATE
JULY 2026

SHEET NUMBER
C55

SHEET: 60 of 86

I:\2\227947 Waitsfield Water and Wastewater Feasibility Stud\Drawings\Civil\Sheet Breakouts\227947-BBR-P-S.dwg 8/27/2026 11:30 AM

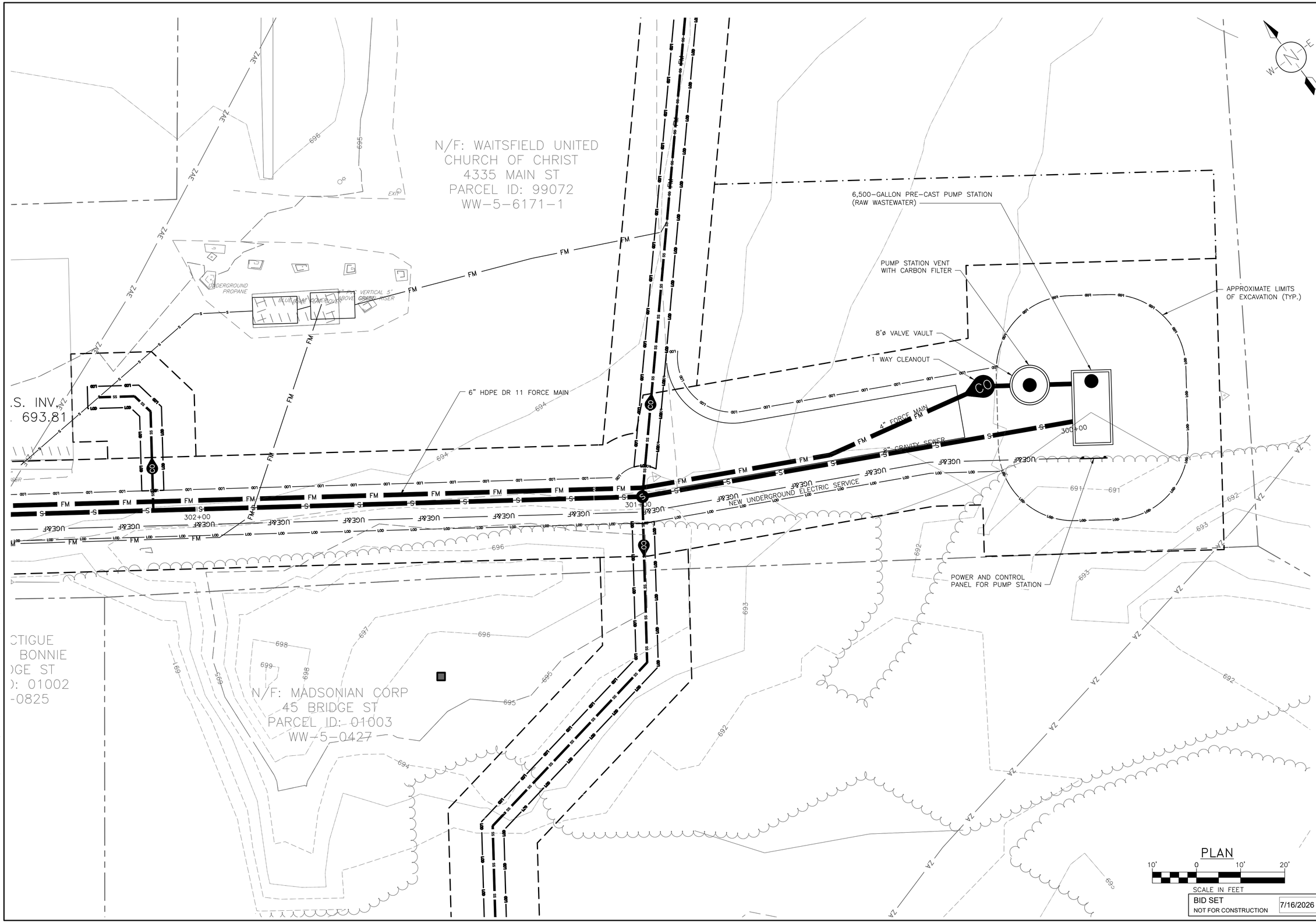

BID SET
NOT FOR CONSTRUCTION
7/16/2026

DuBois & King inc.
www.dubois-king.com
© Copyright 2026 DuBois & King inc.

STATE OF VERMONT
JAMES B. ASHE III
No. 9000
PROFESSIONAL ENGINEER
07-16-2026

REVISIONS			
NUMBER	DATE	REVISION DESCRIPTION	BY

CLIENT NAME
TOWN OF WAITSFIELD

PROJECT NAME
WAITSFIELD COMMUNITY WASTEWATER SYSTEM

PROJECT ADDRESS
4144 MAIN STREET
WAITSFIELD, VERMONT 05673

SHEET TITLE
CONTRACT NO. 2

CHURCH PUMP STATION

D&K PROJECT #	PROJ. ENG.
227947	JBA
DRAWN BY	CHECKED BY
EBS	DDC

DATE
JULY 2026

SHEET NUMBER
C56

I:\2\227947 Waitsfield Water and Wastewater Feasibility Stud\Drawings\Civil\Sheet Breakouts\227947-BDR-P-S.dwg 8/27/2026 11:30 AM

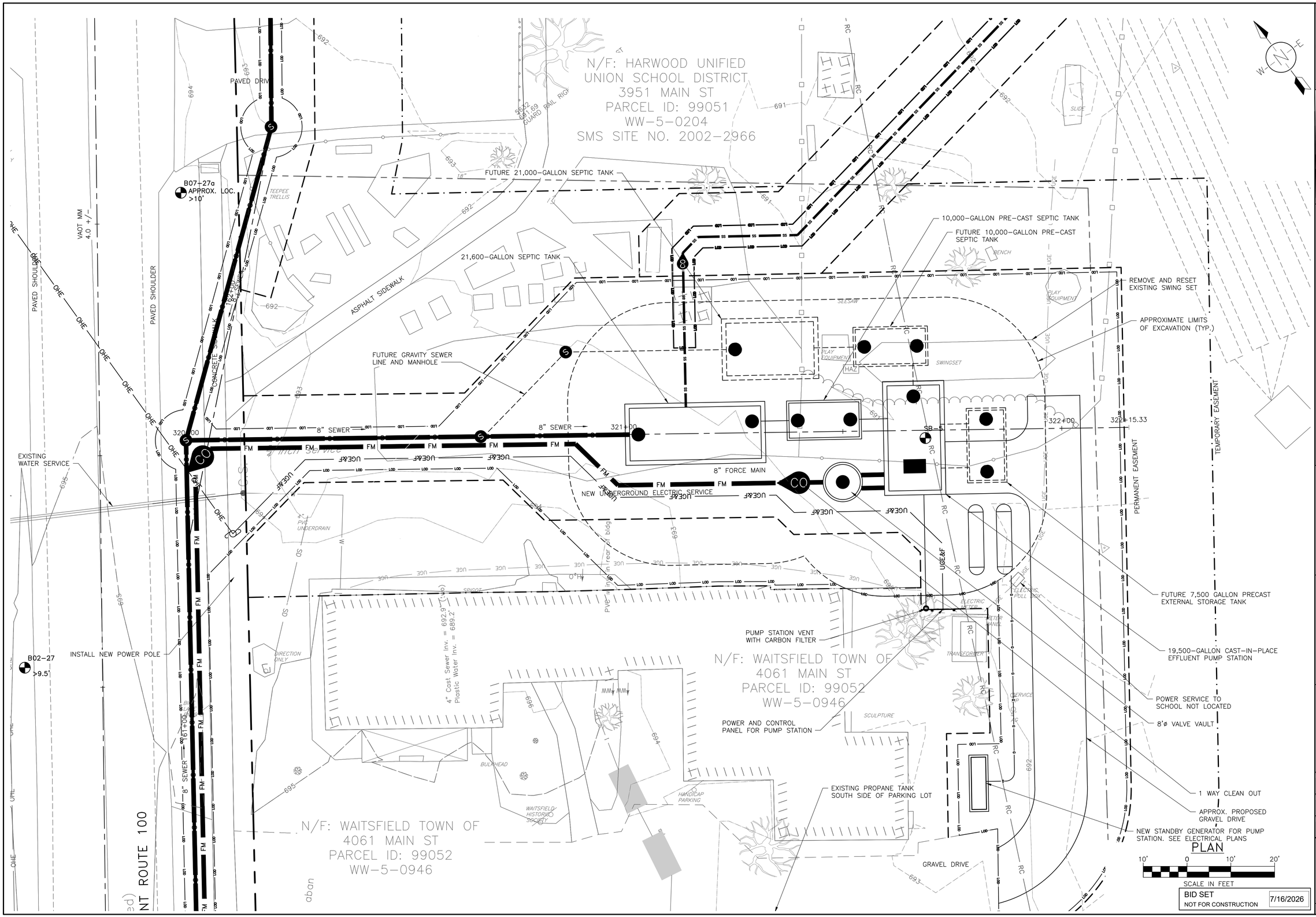

DuBois & King inc.

www.dubois-king.com

© Copyright 2026 DuBois & King inc.

STATE OF VERMONT
ASHLEY E. BOLDUC
PROFESSIONAL ENGINEER
07-16-2026

BID SET
NOT FOR CONSTRUCTION

REVISIONS

NUMBER	DATE	REVISION DESCRIPTION	BY

CLIENT NAME
TOWN OF WAITSFIELD

PROJECT NAME
WAITSFIELD COMMUNITY WASTEWATER SYSTEM

PROJECT ADDRESS
4144 MAIN STREET
WAITSFIELD, VERMONT 05673

SHEET TITLE
CONTRACT NO. 2

SCHOOL PUMP STATION

D&K PROJECT #	PROJ. ENG.
227947	JBA
DRAWN BY	CHECKED BY
EBS	DDC

DATE
JULY 2026

SHEET NUMBER
C57

I:\2\227947 Waitsfield Water and Wastewater Feasibility Stud\Drawings\Civil\Sheet Breakouts\227947-BDR-P-S.dwg 8/27/2026 11:31 AM

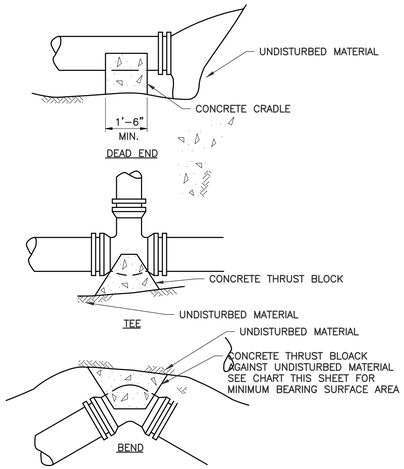

CONCRETE THRUST BLOCK DETAILS

NOT TO SCALE

AREA OF BEARING FACE OF CONCRETE THRUST BLOCKS IN SQUARE FEET

PIPE SIZE (IN)	SOFT WET CLAY, SAND OR SILT	DRY SAND	COMPACT COARSE SAND OR GRAVEL HARDPAN
SOIL BEARING CAPACITIES (APPROXIMATE)			
	1,250 lbs/ft²	4,000 lbs/ft²	6,000 lbs/ft
DEAD END OR TEE			
8 OR LESS	15	5	4
1/4 BEND			
8 OR LESS	21	7	5
1/8 BEND			
8 OR LESS	12	4	3
1/16 BEND			
8 OR LESS	6	2	2

THRUST BLOCK TABLE NOTES

1. FIGURES BASED ON 300 PSI.
2. FOR PIPE SIZES NOT LISTED USE NEXT LARGER PIPE SIZE.
3. WHEN MORE THAN ONE SOIL TYPE IS ENCOUNTERED, THE ONE WITH LEAST BEARING CAPACITY SHALL BE USED.
4. RETAINING RODS OR RESTRAINED JOINT PIPE, AS APPROVED BY THE ENGINEER, SHALL BE USED IN PLACE OF THRUST BLOCKS WHEN MUCK IS ENCOUNTERED.
5. CONTRACTOR MAY PROPOSE SMALLER THRUST BLOCKS BASED ON PIPE SIZES AND MAXIMUM PRESSURES.

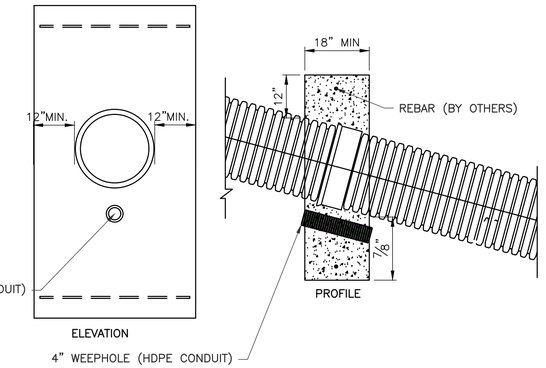

PIPE ANCHOR DETAIL FOR SEWER LINES

NOT TO SCALE

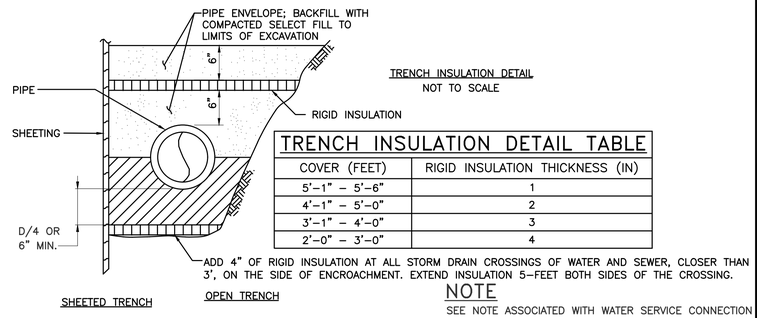

TRENCH INSULATION DETAIL
NOT TO SCALE

TRENCH INSULATION DETAIL TABLE

COVER (FEET)	RIGID INSULATION THICKNESS (IN)
5'-1" – 5'-6"	1
4'-1" – 5'-0"	2
3'-1" – 4'-0"	3
2'-0" – 3'-0"	4

TYPICAL INSULATION DETAIL

NOT TO SCALE

NOTE

SEE NOTE ASSOCIATED WITH WATER SERVICE CONNECTION DETAIL FOR ADDITIONAL INSULATION REQUIREMENTS.

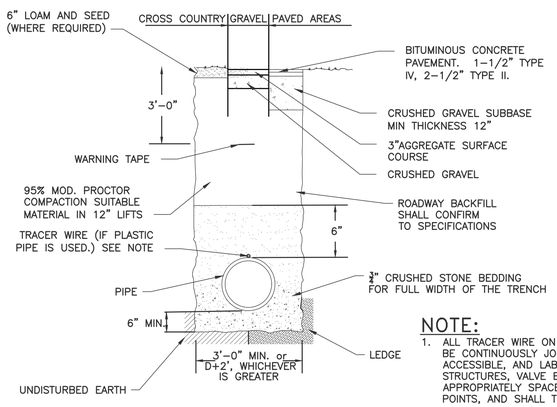

TYPICAL TRENCH DETAIL

NOT TO SCALE

NOTE:

1. ALL TRACER WIRE ON PROJECT SHALL BE CONTINUOUSLY JOINED, ACCESSIBLE, AND LABELED AT ALL STRUCTURES, VALVE BOXES, AND APPROPRIATELY SPACED ACCESS POINTS, AND SHALL TERMINATE AT A COPPERHEAD COBRA T3 (OR APPROVED EQUAL) TESTING STATIONS.

SIZE	O.D.	C900 PVC PIPE RESTRAINT		HARNESS RESTRAINT GLANDS		MAX BELL O.D.	RESTRAINT RODS		CLAMPING BOLTS		APPROX. WEIGHT (LBS.)
		ITEM CODE	QTY	ITEM CODE	QTY		QTY	SIZE	QTY	SIZE	
4	4.80	EZPVCU04	1	EZPVCU04	2	6.75	4	.75*17	2	.63*3.5	20
6	6.90	EZPVCU06	1	EZPVCU06	2	9.23	6	.75*17	2	.63*3.5	30
8	9.05	EZPVCU08	1	EZPVCU08	2	11.50	6	.75*17	2	.75*4	40
10	11.10	EZPVCU10	1	EZPVCU10	2	14.15	8	.75*24	2	.88*5	55
12	13.20	EZPVCU12	1	EZPVCU12	2	16.53	8	.75*24	2	.88*5	65

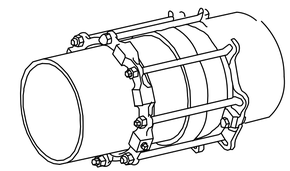

EZ GRIP ULTRA JOINT RESTRAINT FOR C900 PVC PIPE

NOT TO SCALE

NOMINAL PIPE SIZE	SERIES NUMBER	C	D	F	X	J	K2	BOLT QTY	WEDGE QTY	APPROX. WEIGHT (LBS)
3	EZPVCU03	4.8400	1.8300	4.0600	3/4	6.1900	7.5400	4	2	5.6900
4	EZPVCU04	5.9200	1.8300	4.9000	7/8	7.5000	9.1600	4	2	7.2200
6	EZPVCU06	8.0200	1.8700	7.0000	7/8	9.5000	11.1200	6	3	1.7400
8	EZPVCU08	10.1700	1.8800	9.1500	7/8	11.7500	13.7500	6	4	15.1300
10	EZPVCU10	12.2200	2.0300	11.2000	7/8	14.0000	15.9100	8	6	22.3700
12	EZPVCU12	14.3200	2.0500	13.3000	7/8	16.2500	18.2300	8	6	25.5000
14	EZPVCU14	16.4000	2.6900	15.4400	7/8	18.7500	20.6300	10	10	51.7000
16	EZPVCU16	18.5000	2.6900	17.5400	7/8	21.0000	22.8800	12	12	61.3000
18	EZPVCU18	20.6000	2.7600	19.6400	7/8	23.2500	25.2500	12	12	72.3700
20	EZPVCU20	22.7000	2.7600	21.7400	7/8	25.5000	27.5000	14	14	81.8200
24	EZPVCU24	26.9000	2.8300	25.9400	7/8	30.0000	32	16	16	100.6200

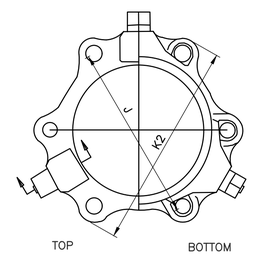

EZ GRIP ULTRA PVC RESTRAINTS

NOT TO SCALE

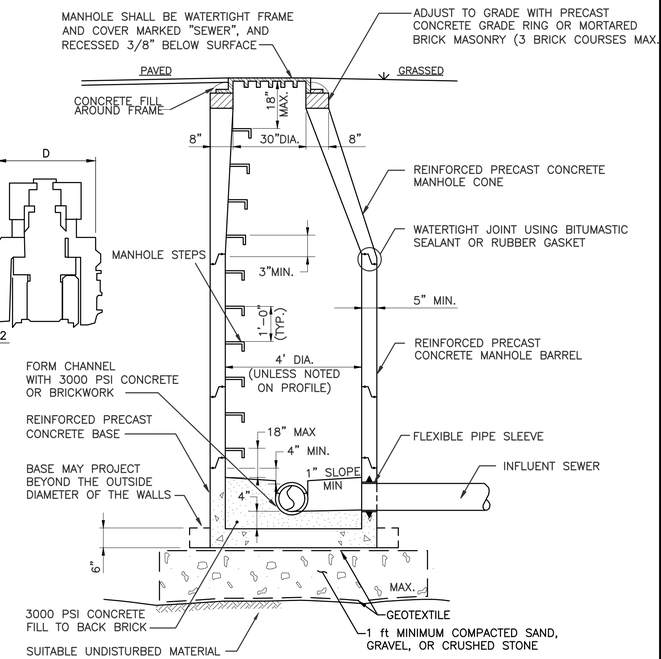

NOTES:

1. WHEN MANHOLE DEPTH IS LESS THAN 6 FEET, A FLAT REINFORCED CONCRETE COVER WITH AN ECCENTRIC OPENING AND CAPABLE OF H-20 WHEEL LOADS MAY BE USED.
2. MANHOLES SHALL BE CAPABLE OF WITHSTANDING H-20 WHEEL LOADS. ADDITIONAL REINFORCING AND/OR WALL THICKNESS MAY BE REQUIRED TO MEET THE H-20 WHEEL LOAD.

CONCRETE MANHOLE DETAIL

NOT TO SCALE

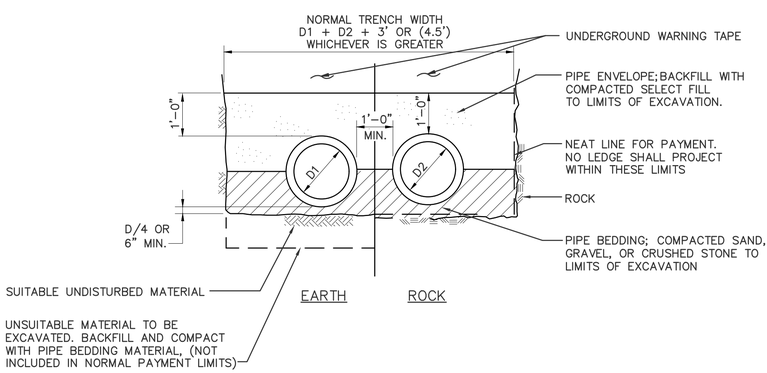

PARALLEL PIPE INSTALLATION SECTION

NOT TO SCALE

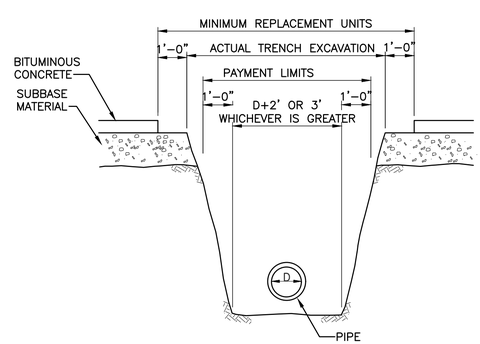

PAVEMENT REPLACEMENT DETAIL

NOT TO SCALE

BID SET
NOT FOR CONSTRUCTION
7/16/2026

DuBois & King inc.
www.dubois-king.com
© Copyright 2026 DuBois & King inc.

STATE OF VERMONT — ASHLEY E. BOSS — PROFESSIONAL ENGINEER — 07-16-2026
BID SET NOT FOR CONSTRUCTION

REVISIONS			
NUMBER	DATE	REVISION DESCRIPTION	BY

CLIENT NAME
TOWN OF WAITSFIELD

PROJECT NAME
WAITSFIELD COMMUNITY WASTEWATER SYSTEM

PROJECT ADDRESS
4144 MAIN STREET
WAITSFIELD, VERMONT 05673

SHEET TITLE
CONTRACT NO. 2
SEWER AND TRENCH DETAILS

D&K PROJECT #	PROJ. ENG.
227947	JBA
DRAWN BY	CHECKED BY
EBS	DDC

DATE
JULY 2026

SHEET NUMBER
C58

SHEET: 63 of 86

I:\2\227947 Waitsfield Water and Wastewater Feasibility Stud\Drawings\Civil\227974-DT01.dwg 8/27/2026 11:31 AM

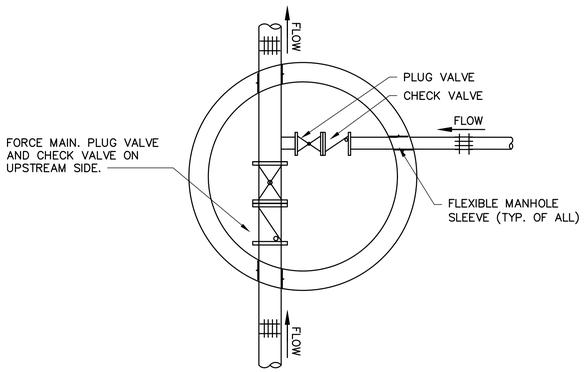

PLAN

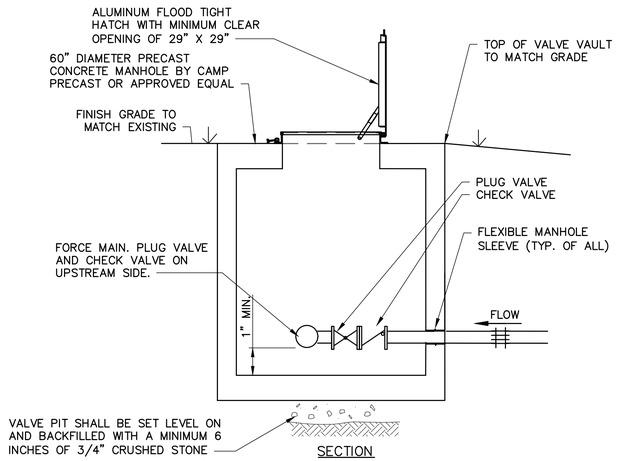

SECTION

FORCE MAIN VALVE VAULT DETAIL

NOT TO SCALE

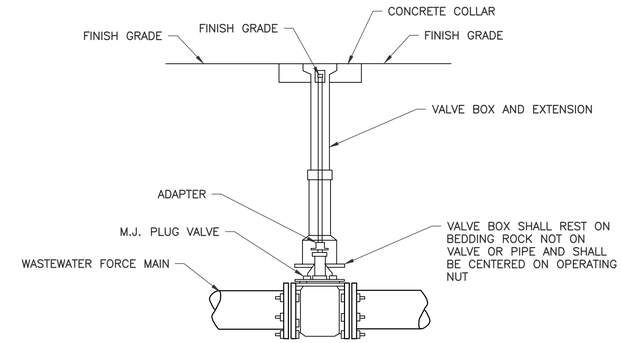

NOTES:

1. WHEN PLUG VALVE IS NOT LOCATED IN PAVEMENT, PLACE A GREEN PAVEMENT REFLECTOR MARKER IN THE DRIVE LANE, ADJACENT TO THE VALVE.
2. WRENCH NUT SHALL NOT BE MORE THAN 30" BELOW FINISHED GRADE.

BURIED FORCE MAIN VALVE DETAIL

NOT TO SCALE

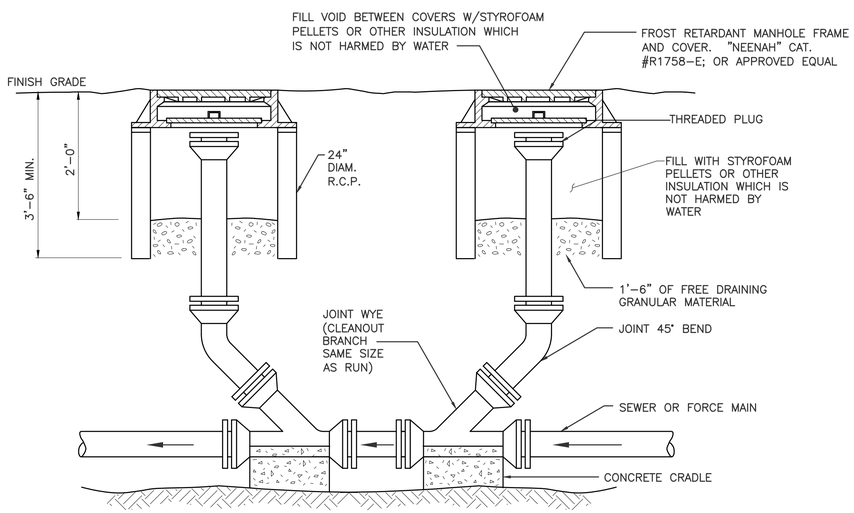

NOTES:

1. CONTRACTOR MAY PROVIDE RESTRAINED MECHANICAL JOINT, SOLVENT WELDED, FUSED, OR OTHER JOINT RESTRAINT SYSTEM THAT IS COMPATIBLE WITH PIPE SIZE AND MATERIALS.
2. CONTRACTOR SHALL PLACE STYROFOAM PELLETS IN HEAVY-DUTY CONTRACTOR, 42 GALLON, 3-MIL THICKNESS GARBAGE BAGS. BAGS SHALL ONLY BE PARTIALLY FILLED TO ALLOW FOR TIGHT PLACEMENT AROUND CLEANOUT RISERS.

FORCE MAIN TWO-WAY CLEANOUT DETAIL

NOT TO SCALE

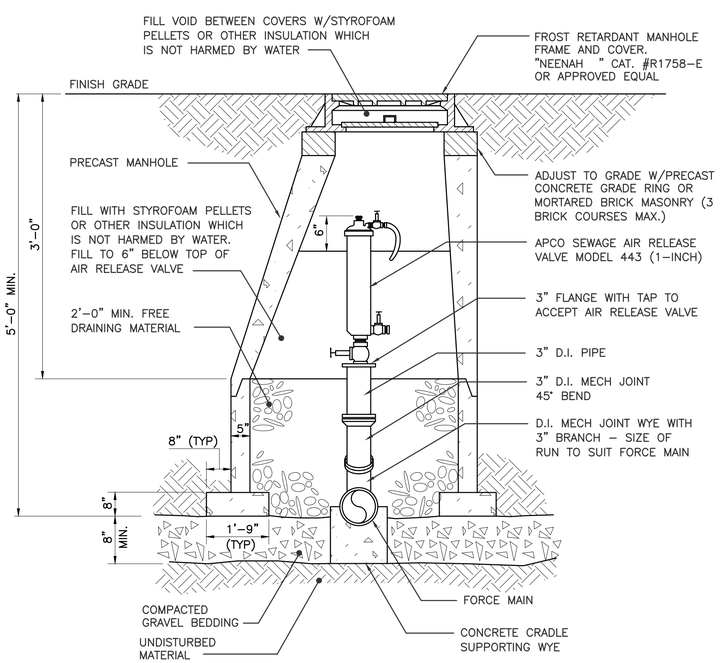

FORCE MAIN AIR/VAC RELEASE DETAIL

NOT TO SCALE

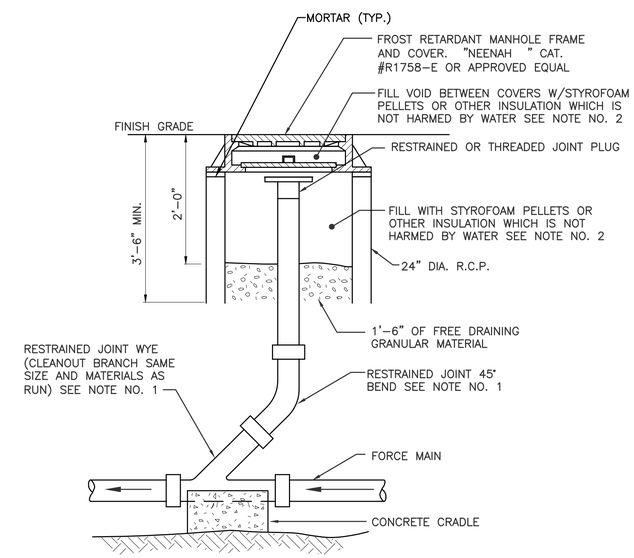

NOTES:

1. CONTRACTOR MAY PROVIDE RESTRAINED MECHANICAL JOINT, SOLVENT WELDED, FUSED, OR OTHER JOINT RESTRAINT SYSTEM THAT IS COMPATIBLE WITH PIPE SIZE AND MATERIALS.
2. CONTRACTOR SHALL PLACE STYROFOAM PELLETS IN HEAVY-DUTY CONTRACTOR, 42 GALLON, 3-MIL THICKNESS GARBAGE BAGS. BAGS SHALL ONLY BE PARTIALLY FILLED TO ALLOW FOR TIGHT PLACEMENT AROUND CLEANOUT RISERS.

FORCE MAIN ONE-WAY CLEANOUT DETAIL

NOT TO SCALE

BID SET
NOT FOR CONSTRUCTION
7/16/2026

DuBois & King inc.
www.dubois-king.com
© Copyright 2026 DuBois & King inc.

STATE OF VERMONT
ASHLEY B. BUCKLEY
PROFESSIONAL ENGINEER
07-16-2026
BID SET
NOT FOR CONSTRUCTION

REVISIONS

NUMBER	DATE	REVISION DESCRIPTION	BY

CLIENT NAME
TOWN OF WAITSFIELD

PROJECT NAME
WAITSFIELD COMMUNITY WASTEWATER SYSTEM

PROJECT ADDRESS
4144 MAIN STREET
WAITSFIELD, VERMONT 05673

SHEET TITLE
CONTRACT NO. 2
FORCE MAIN DETAILS

D&K PROJECT #	PROJ. ENG.
227947	JBA
DRAWN BY	CHECKED BY
EBS	DDC

DATE
JULY 2026

SHEET NUMBER
C59

I:\2\227947 Waitsfield Water and Wastewater Feasibility Stud\Drawings\Civil\227974-DT01.dwg 8/27/2026 11:31 AM

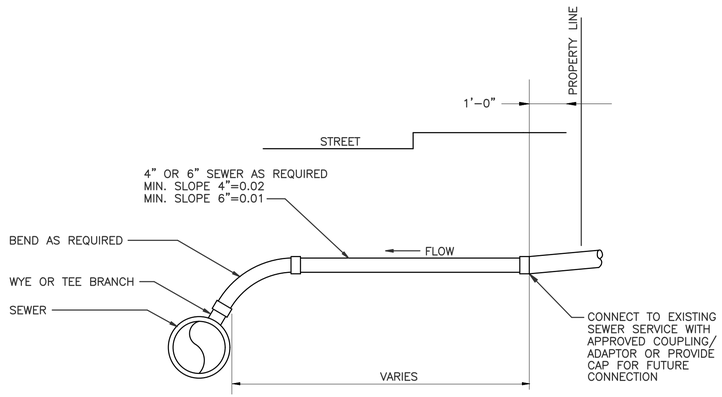

SEWER SERVICE CONNECTION DETAIL

NOT TO SCALE

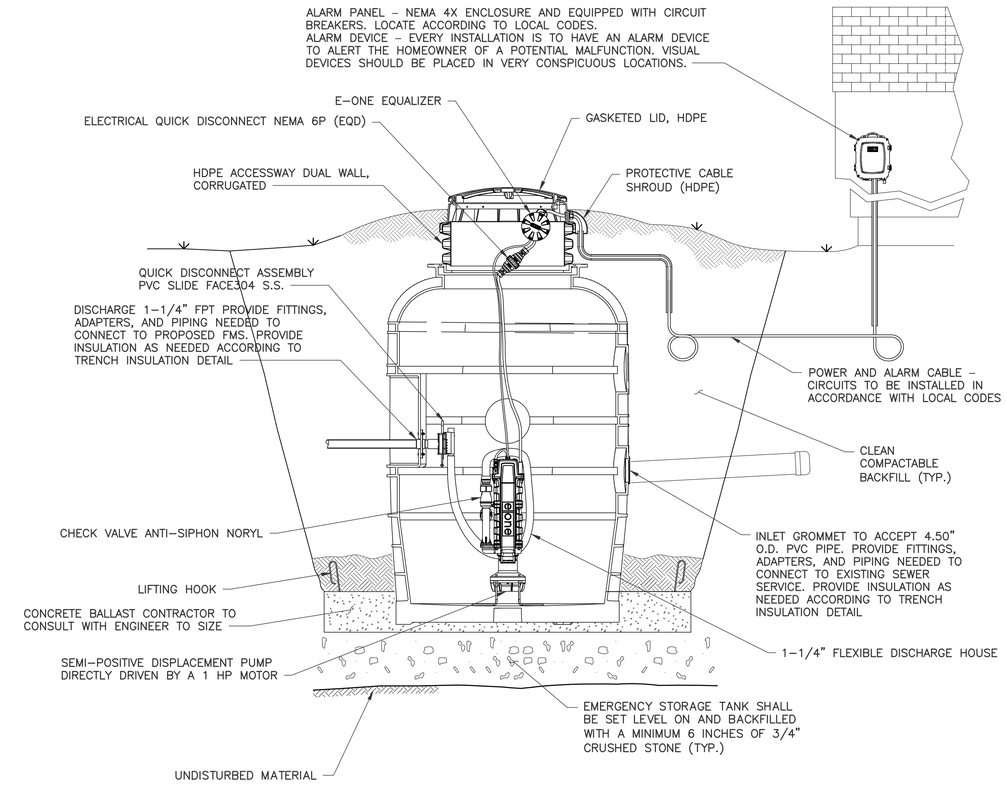

GRINDER PUMP STATION (TYPE 1)

NOT TO SCALE

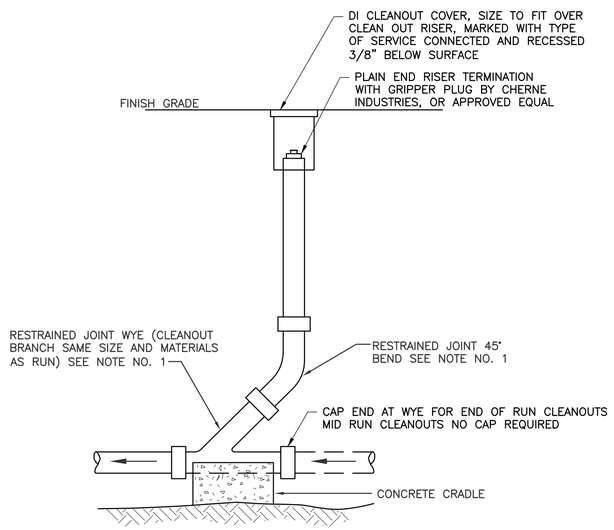

NOTES:

1. CONTRACTOR MAY PROVIDE RESTRAINED MECHANICAL JOINT, SOLVENT WELDED, FUSED, OR OTHER JOINT RESTRAINT SYSTEM THAT IS COMPATIBLE WITH PIPE SIZE AND MATERIALS.

CLEANOUT DETAIL (GRAVITY)

NOT TO SCALE

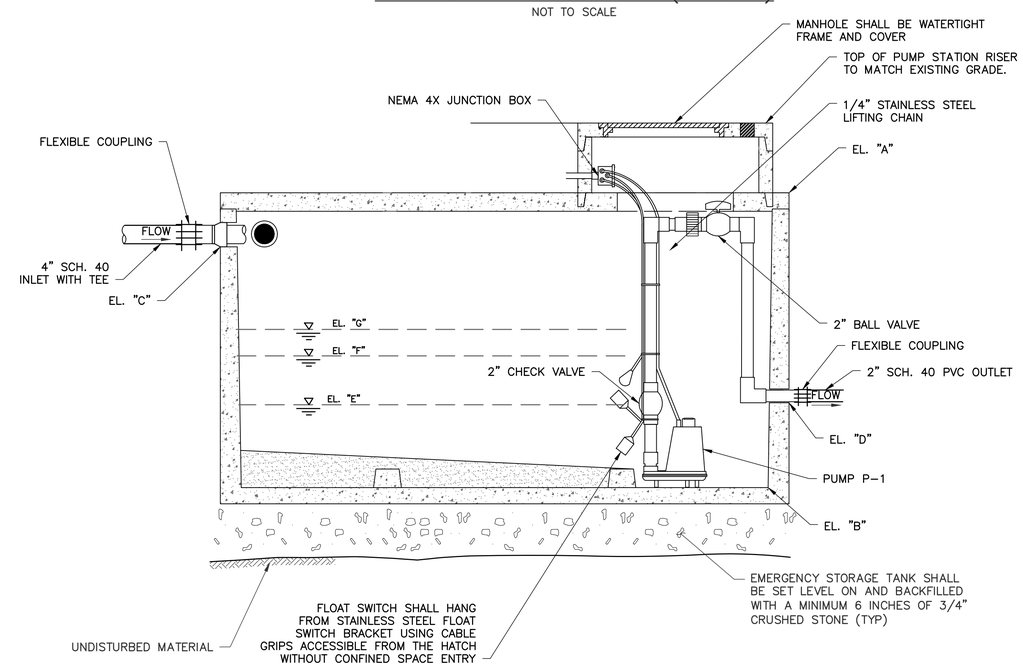

1,500–GALLON GRINDER PUMP STATION (TYPE 2)

NOT TO SCALE

BID SET
NOT FOR CONSTRUCTION 7/16/2026

DuBois & King inc.
www.dubois-king.com
© Copyright 2026 DuBois & King inc.

STATE OF VERMONT — DAVID A. ASHLEY — PROFESSIONAL ENGINEER — 07-16-2026

BID SET NOT FOR CONSTRUCTION

REVISIONS

NUMBER	DATE	REVISION DESCRIPTION	BY

CLIENT NAME
TOWN OF WAITSFIELD

PROJECT NAME
WAITSFIELD COMMUNITY WASTEWATER SYSTEM

PROJECT ADDRESS
4144 MAIN STREET
WAITSFIELD, VERMONT 05673

SHEET TITLE
CONTRACT NO. 2
SEWER SERVICE DETAILS

D&K PROJECT #	PROJ. ENG.
227947	JBA
DRAWN BY	CHECKED BY
EBS	DDC

DATE
JULY 2026

SHEET NUMBER
C60

SHEET: 65 of 86

I:\21\227947 Waitsfield Water and Wastewater Feasibility Stud\Drawings\Civil\227974-DT01.dwg 8/27/2026 11:32 AM

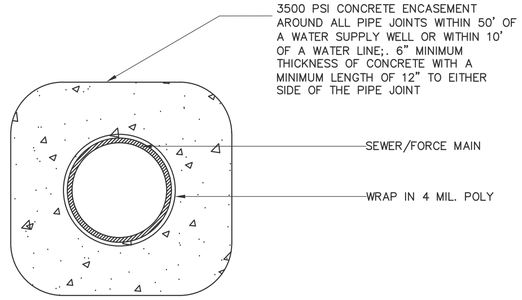

CONCRETE ENCASED SEWER/FORCE MAIN JOINTS DETAIL

NOT TO SCALE

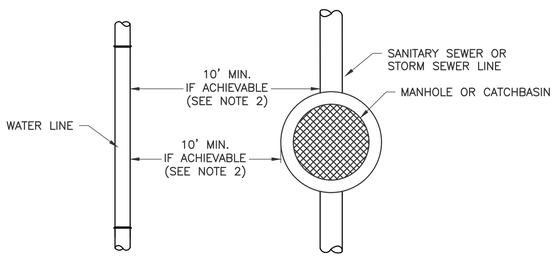

PARALLEL SEWER/FORCE MAIN AND WATER DETAIL

NOT TO SCALE

NOTES:

1. WATER MAINS SHALL BE LAID AT LEAST 10 FEET HORIZONTALLY FROM ANY EXISTING OR PROPOSED MANHOLE OR SANITARY SEWER. THE DISTANCE SHALL BE MEASURED EDGE TO EDGE.
2. IN CASES WHERE IT IS NOT FEASIBLE TO MAINTAIN A 10 FOOT SEPARATION, CONTRACTOR MUST OBTAIN APPROVAL FROM THE DESIGN ENGINEER. SUCH VARIANCE MAY ALLOW INSTALLATION OF THE SEWER/FORCE MAIN CLOSER TO A SEWER, PROVIDED THAT THE SEWER IS LAID IN A SEPARATE TRENCH OR ON AN UNDISTURBED EARTH SHELF LOCATED ON ONE SIDE OF THE WATER AT SUCH AN ELEVATION THAT THE BOTTOM OF THE WATER MAIN IS AT LEAST 18 INCHES ABOVE THE TOP OF THE SEWER.
3. WHERE SEWERS ARE BEING INSTALLED AND MINIMUM SEPARATIONS CANNOT BE MET, THE SEWER MATERIALS SHALL BE WATER MAIN PIPE OR EQUIVALENT AND SHALL BE PRESSURE TESTED TO ENSURE WATER TIGHTNESS.

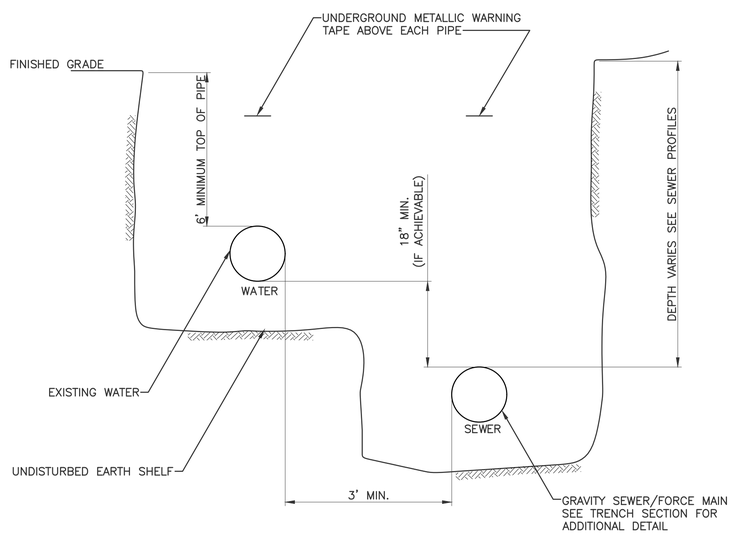

PARALLEL SEWER/FORCE MAIN AND WATER DETAIL

NOT TO SCALE

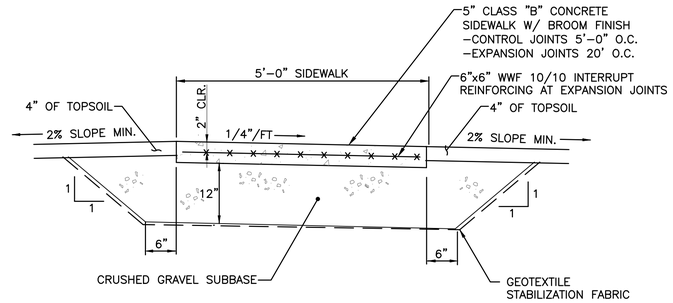

NOTES:

1. MAXIMUM ALLOWABLE SIDEWALK SLOPE IN ALL DIRECTIONS SHALL BE IN ACCORDANCE WITH AMERICAN DISABILITY ACT (ADA) STANDARDS FOR ACCESSIBLE DESIGN; CROSS-SLOPE SHALL BE NO LESS THAN 1% AND NO GREATER THAN 2%
2. ALL MATERIALS AND WORKMANSHIP SHALL COMPLY WITH VAOT STANDARD SPECIFICATIONS
3. REMOVE ALL UNSUITABLE MATERIAL TO THE SATISFACTION OF THE ENGINEER
4. IN THE EVENT BEDROCK IS ENCOUNTERED, EXCAVATE BEDROCK TO A MINIMUM OF 6" BELOW THE SUB-BASE MATERIAL AND REPLACE WITH BANKRUN GRAVEL
5. SUBGRADE MATERIAL SHALL BE SHAPED AND COMPACTED TO AN EVEN SURFACE. ALL SOFT AND YIELDING MATERIAL SHALL BE REMOVED AND REPLACED WITH ACCEPTABLE MATERIAL
6. 1/4" RADIUS x 1/2" WIDE x 1/2" DEPTH TOOLED CONTROL JOINTS SHALL BE LOCATED 5' O.C.
7. 1/2" EXPANSION JOINTS SHALL CONFORM TO AASHTO M153, TYPE III OR AASHTO M213 AND BE LOCATED 20' O.C.
8. PROTECTIVE COATING SHALL BE APPLIED IN ACCORDANCE WITH VAOT

CONCRETE SIDEWALK SECTION

NOT TO SCALE

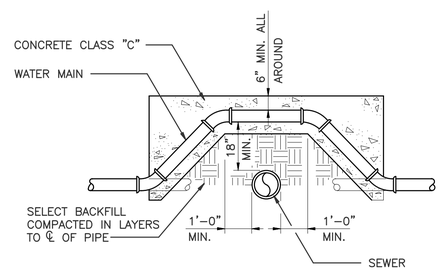

DETAIL NO.1

WATER MAIN RELOCATION - ABOVE SEWER

(PREFERRED METHOD)

NOT TO SCALE

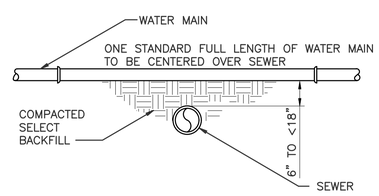

DETAIL NO.2

WATER MAIN LESS THAN 18" ABOVE SEWER

NOT TO SCALE

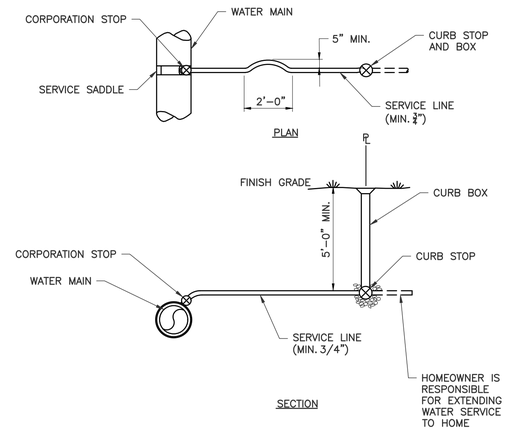

WATER SERVICE CONNECTION DETAIL

NOT TO SCALE

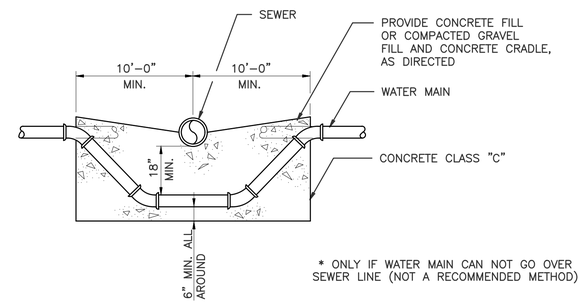

* ONLY IF WATER MAIN CAN NOT GO OVER SEWER LINE (NOT A RECOMMENDED METHOD)

DETAIL NO.3

WATER MAIN RELOCATION - BELOW SEWER*

NOT TO SCALE

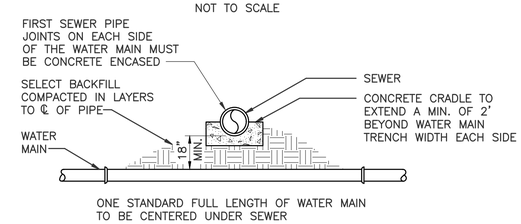

* NOT A RECOMMENDED METHOD

DETAIL NO.4

WATER MAIN BELOW SEWER*

NOT TO SCALE

NOTES:

1. DETAILS NO.1 & NO.3 — ALLOWABLE WATER PIPE DEFLECTIONS MAY BE USED TO ACCOMPLISH THE RELOCATIONS IN LIEU OF ELBOWS AND FITTINGS.
2. DETAILS NO.2, NO.3, & NO.4 — THE SEWER PIPE SHALL BE CONSTRUCTED OR RECONSTRUCTED OF DUCTILE IRON PIPE OR PVC C900 PRESSURE PIPE WITH MECHANICAL JOINTS AND PRESSURE TESTED FOR AT LEAST 20' EACH SIDE OF WATER MAIN.
3. DETAILS NO.1, NO.2, NO.3, & NO.4 — WATER MAIN TO BE RECONSTRUCTED SHALL BE PUSH-ON OR M.J. D.I. PIPE FOR A DISTANCE OF 10 FEET EACH SIDE OF THE CENTERLINE OF THE SEWER.
4. DETAIL NO.3 & NO.4 — UNDER NO CIRCUMSTANCES SHALL THE SEWER BE LESS THAN 18" ABOVE THE WATER MAIN.

BID SET
NOT FOR CONSTRUCTION 7/16/2026

DuBois & King inc.
www.dubois-king.com
© Copyright 2026 DuBois & King inc.

STATE OF VERMONT — BID SET NOT FOR CONSTRUCTION — 07-16-2026

REVISIONS			
NUMBER	DATE	REVISION DESCRIPTION	BY

CLIENT NAME
TOWN OF WAITSFIELD

PROJECT NAME
WAITSFIELD COMMUNITY WASTEWATER SYSTEM

PROJECT ADDRESS
4144 MAIN STREET
WAITSFIELD, VERMONT 05673

SHEET TITLE
CONTRACT NO. 2
WATER AND TRENCH DETAILS

D&K PROJECT #	PROJ. ENG.
227947	JBA
DRAWN BY	CHECKED BY
EBS	DDC

DATE
JULY 2026

SHEET NUMBER
C61

I:\227947 Waitsfield Water and Wastewater Feasibility Stud\Drawings\Civil\227974-DT01.dwg 8/27/2026 11:32 AM

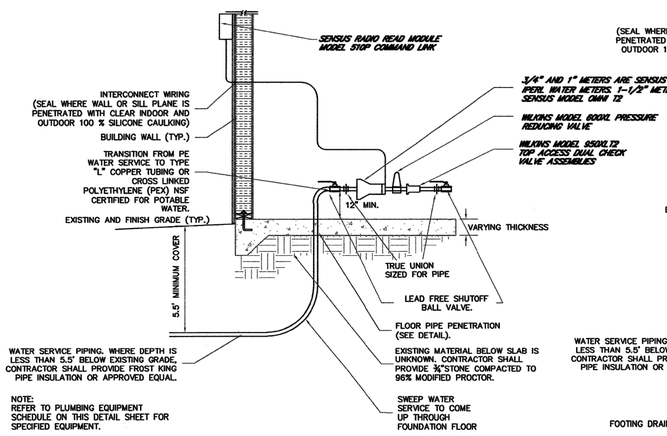

FOUNDATION PENETRATION AND METER ASSEMBLY DETAIL- SLAB ON GRADE

NOT TO SCALE

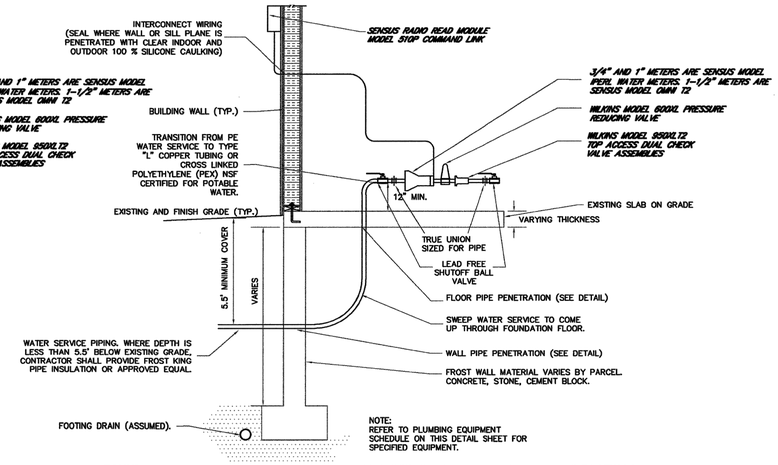

FOUNDATION PENETRATION AND METER ASSEMBLY DETAIL- SLAB ON GRADE W/ FROST FOOTINGS

NOT TO SCALE

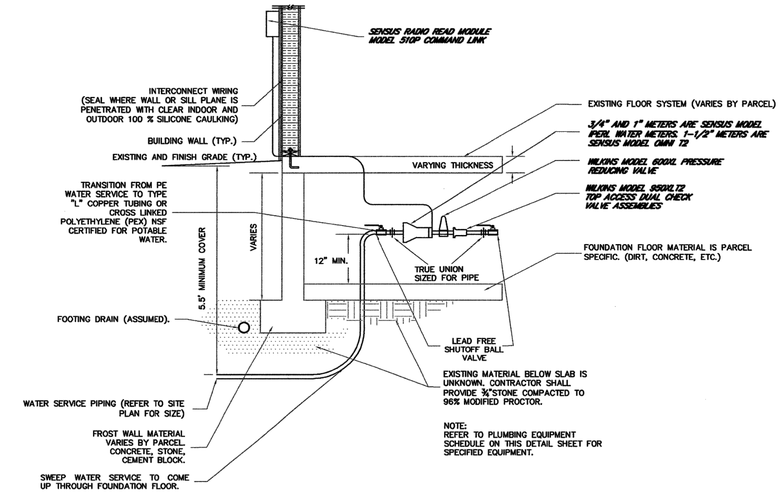

FOUNDATION PENETRATION AND METER ASSEMBLY DETAIL- CRAWL SPACE W/ FROST FOOTINGS

NOT TO SCALE

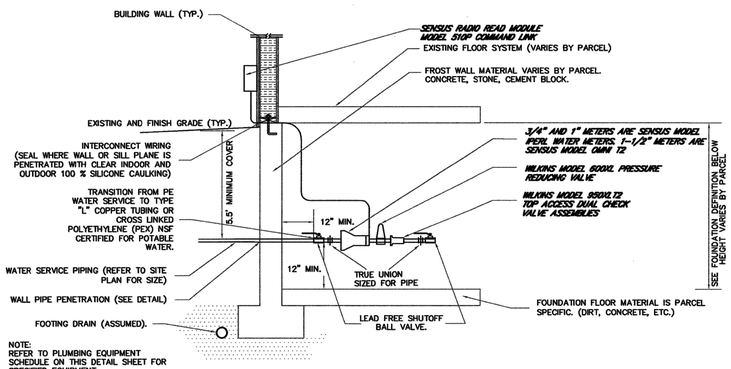

FOUNDATION PENETRATION AND METER ASSEMBLY DETAIL- BASEMENT

NOT TO SCALE

FOUNDATION PENETRATION NOTES

1. ALL FOUNDATION WALL AND FLOOR PENETRATIONS SHALL RECEIVE 4" SCHEDULE 80 PVC SLEEVES. FLOOR PENETRATION SHALL INCLUDE APPROPRIATELY SIZED LINK SEAL BETWEEN SERVICE PIPING AND SLEEVE.

2. ALL FLOOR AND WALL SLEEVE AND LINK SEAL SIZING SHALL BE PERFORMED BY THE CONTRACTOR AND REVIEWED BY THE ENGINEER PRIOR TO CONSTRUCTION. SUBMITTALS REQUIRED AS FOLLOWS:
   A. 2" WATER SERVICE PIPE, SLEEVE, AND LINK SEALS
   B. 1½" WATER SERVICE PIPE, SLEEVE, AND LINK SEALS
   C. 1" WATER SERVICE PIPE, SLEEVE, AND LINK SEALS
   D. ¾" WATER SERVICE PIPE, SLEEVE, AND LINK SEALS

3. IF DEPTH TO WATER SERVICE PIPE IS LESS THAN 5 1/2 FEET, AND APPROVED BY THE ENGINEER, THE CONTRACTOR SHALL INSULATE WITH FROST KING PIPE WRAP INSULATION SUITABLE FOR DIRECT BURY OR APPROVED EQUAL.

4. MEASUREMENT AND PAYMENT FOR FOUNDATION PENETRATION SHALL INCLUDE THE FOUNDATION CORE, WATER SERVICE PIPE FROM 12" OUTSIDE OF THE FOUNDATION WALL TO 12" INSIDE THE FOUNDATION WALL, SLEEVE PIPE, LINK SEALS, AND BALL VALVE, ALL OF APPROPRIATE SIZE, SPRAY FOAM INSULATION AND HYDRAULIC CEMENT /AND OR NON-SHRINK GROUT. REFER TO MEASUREMENT AND PAYMENT SECTION OF THE PROJECT DOCUMENTS FOR ADDITIONAL INFORMATION

5. BALL VALVE SHALL BE CLOSED, AND REMAIN CLOSED UNTIL THE INSTALLATION OF THE WATER METER ASSEMBLY HAS BEEN COMPLETED.

6. IF SLAB OR CRAWL SPACE IS UN-HEATED, ALL INTERIOR PIPING SHALL BE WRAPPED WITH FROST KING PIPE INSULATION OR APPROVED EQUAL. IN SOME CASES. ENGINEER MAY REQUEST THE USE OF "THERMAL PROTECTION." CONTRACTOR SHALL PROVIDE (48) HOUR WRITTEN NOTICE TO ENGINEER IF AN UNHEATED OR FROST PENETRATING ZONE IS ENCOUNTERED.

7. FOUNDATIONS TYPES SHALL BE DEFINED AS FOLLOWS:
   A. SLAB ON GRADE
      – 0 TO 18" OF WORKABLE VERTICAL SPACE
   B. CRAWL SPACE
      – 18" TO 36" OF WORKABLE VERTICAL SPACE
   C. BASEMENT
      – 36" AND UP OF WORKABLE VERTICAL SPACE

8. PAY LIMIT FOR STONE FOUNDATIONS SHALL BE 1–3 FEET IN THICKNESS. EACH ADDITIONAL 0.5 LINEAR FEET OF FOUNDATION PENETRATION IN A STONE WALL WILL BE PAID FOR UNDER THE ALTERNATE ITEM. IF EXTENUATING CIRCUMSTANCES ARE ENCOUNTERED DURING CONSTRUCTION, CONTRACTOR SHALL COORDINATE WITH ENGINEER, MUNICIPAL PROJECT MANAGER, AND THE TOWN OF WAITSFIELD WATER TASK FORCE, PROVIDING AMPLE TIME FOR REVIEW OF ANY FIELD CHANGES. ANY DELAY WILL NOT RESULT IN ADDITIONAL COST TO THE OWNER, ENGINEER, OR THE TOWN OF WAITSFIELD.

9. ALL WORK ON STONE FOUNDATIONS SHALL BE COMPLETED BY A PROFESSIONAL STONE MASON WITH A TRACEABLE AND ACCEPTABLE WORK HISTORY. FOR BIDDING AND ESTIMATING PURPOSES, CONTRACTOR SHALL ASSUME THAT ALL STONE FOUNDATIONS ENCOUNTERED ARE MORTARED. ALL MASONRY WORK SHALL CONFORM TO THE PROJECT SPECIFICATIONS AND LATEST EDITION OF THE NATIONAL MASONRY STANDARDS.

10. ALL FOUNDATION PENETRATIONS SHALL BE SEALED WITH A NON SHRINK GROUT AND HYDRAULIC CEMENT.

METER ASSEMBLY NOTES

1. ALL METER ASSEMBLIES ARE TO BE INSTALLED IN A FROST FREE LOCATION AND CERTIFIED BY A MASTER PLUMBER. FROST FREE LOCATIONS ARE DEFINED AS ANY OF THE FOLLOWING:
   A. BASEMENT WITH A MINIMUM 5 FOOT WALL (HEATED OR UNHEATED)
   B. ANY HEATED SPACE (SLAB ON GRADE, CRAWL SPACE, OR BASEMENT)
   C. ANY SPACE WHICH CONTAINS EXISTING PIPING THAT HAS NOT FROZEN OR BEEN PRONE TO FREEZING.

2. IF A FROST PENETRATING ZONE IS ENCOUNTERED, CONTRACTOR SHALL PROVIDE WRITTEN NOTICE TO ENGINEER, WITH PHOTOS AND A FIELD SKETCH. ENGINEER MAY COORDINATE A SITE VISIT WITH THE RESIDENT PROJECT ENGINEER TO DEVELOP A SOLUTION. IN THE EVENT NO SOLUTION IS OBTAINED, ENGINEER MAY REQUEST THE INSTALLATION OF A METER PIT, PER THE DETAIL, IN LIEU OF A STANDARD METER ASSEMBLY. IF A METER PIT IS INSTALLED OR IF A FROST PENETRATING ZONE CANNOT BE AVOIDED, ENGINEER MAY REQUEST THE USE OF "THERMAL PROTECTION." THIS INCLUDES SELF REGULATING HEAT TAPE OF APPROPRIATE LENGTH, AND THERMAL JACKETS FOR THE METER ASSEMBLY, PRESSURE REDUCING VALVE, AND BACKFLOW PREVENTION DEVICE. REFER TO MEASUREMENT AND PAYMENT FOR ADDITIONAL INFORMATION.

3. ALL RESIDENTIAL BUILDINGS, INCLUDING APARTMENTS, SHALL RECEIVE A ¾" WATER METER, REGARDLESS OF THE PIPE ENTERING THE BUILDING.

4. ALL FITTINGS REQUIRED TO REDUCE DOWN TO APPROPRIATE METER SHALL BE INCLUDED IN THE METER PAY ITEM. ALL SERVICES SHALL BE REDUCED IN SIZE AFTER THE FOUNDATION BALL VALVE AND PRIOR TO THE METER ASSEMBLY. THE INITIAL BALL VALVE 1 FOOT INSIDE THE FOUNDATION WALL SHALL BE PAID UNDER THE FOUNDATION PENETRATION PAY ITEM.

5. ALL INTERIOR PIPING SHALL BE TYPE L COPPER, CROSS-LINKED POLYETHYLENE (PEX) OR APPROVED EQUAL.

6. PAY LIMIT OF THE METER ASSEMBLY SHALL BE ALL MATERIAL LABOR AND EQUIPMENT TO INSTALL THE METER AS SHOWN IN THE DETAILS BETWEEN THE (2) LEAD FREE BALL VALVES. REFER TO THE MEASUREMENT AND PAYMENT SECTION FOR SPECIFIC INFORMATION.

7. AT THE REQUEST OF THE ENGINEER, THE METER ASSEMBLY MAY BE MOVED TO AN ALTERNATE LOCATION THAN WHERE THE SERVICE PIPE ENTERS THE FOUNDATION TO ACCOMMODATE EXISTING OBSTRUCTIONS AND PROVIDE EASIER ACCESSIBILITY FOR FUTURE WORK. CONTRACTOR SHALL SUBMIT ACTUAL INVOICES FOR MATERIALS USED, AND WORK BASED ON THE HOURLY RATE INCLUDED WITHIN THE BID SCHEDULE. A MAXIMUM OF 15% OVERHEAD AND PROFIT WILL BE ADDED TO THIS ADDITIONAL WORK. ALL WORK COMPLETED MUST BE INVOICED AND REQUISITIONED WITHIN THAT PERIODS PAY REQUEST FOR PAYMENT TO BE OBTAINED.

8. THE SPECIFICATION OF SENSUS AND WATTS METERS AND PARTS IS INTENDED TO DEFINE A LEVEL OF QUALITY AND FUNCTION, AND IS NOT INTENDED AS A SOLE SOURCE SPECIFICATION. ALTERNATE MANUFACTURERS WILL BE CONSIDERED, PROVIDED INFORMATION IS SUBMITTED (14) DAYS PRIOR TO THE BID OPENING.

9. ALL METER ASSEMBLIES SHALL BE SUPPORTED BY A FREE STANDING UNI-STRUT BRACKET TO PROPERLY SECURE THE METER. FOR METERS THAT ARE 1 ½"AND LARGER, CONTRACTOR SHALL SUPPORT METER TO WALL AND FLOOR WITH UNI-STRUT WALL AND FLOOR MOUNTS. (SHOP DRAWING AND SUBMITTAL REQUIRED PRIOR TO INSTALLATION).

10. FOR ALL METERS REQUISITIONED FOR PAYMENT, CERTIFIED PLUMBER MUST HAVE COMPLETED THE METER INSTALLATION CHECKLIST FOR EACH METER, ATTACHED IN SPECIFICATION 15316 – WATER METERS AND INSTALLATION. ONLY METERS WHICH HAVE AN ASSOCIATED CHECKLIST WITH AS-BUILT INFORMATION AND PHOTOS WILL BE AUTHORIZED FOR PAYMENT.

PLUMBING EQUIPMENT SCHEDULE

1. ALL INTERIOR BALL VALVES SHALL BE MANUFACTURED BY APOLLO, WATTS, OR APPROVED EQUAL AND CERTIFIED LEAD FREE BY THE MANUFACTURER.

2. ALL CHECK VALVES SHALL BE DUAL VALVE ASSEMBLIES (BACKFLOW PREVENTION DEVICES)AS FOLLOWS:
   METER SIZE ¾" TO 1" = WATTS LF7, APOLLO DUC4N, OR APPROVED EQUAL
   METER SIZE 1" TO 2" = WATTS LF 007, APOLLO DC40, OR APPROVED EQUAL
   METER SIZE 2" & UP = FEBCO MASTER SERIES 856, APOLLO RPDA40, OR APPROVED EQUAL

3. ALL PRESSURE REDUCING VALVES SHALL BE AS FOLLOWS:
   METER SIZE ¾" TO 2" = WATTS LFU5B-Z3, APOLLO PR 36 SERIES, OR APPROVED EQUAL

4. ALL WATER METERS SHALL BE AS FOLLOWS:
   METER SIZE ¾" TO 1" = SENSUS IPERL, SENSUS SRII, ELSTER SM700 SMART METER, OR APPROVED EQUAL
   METER SIZE 1-1/2" TO 2" = OMNI C2, ELSTER EVOQ4, OR APPROVED EQUAL

5. ALL RADIO READ MODULES SHALL BE EITHER SENSUS 510P. ITRON 60W-R, OR APPROVED EQUAL.

6. PRESSURE GAGE SHALL BE ASHCROFT, AMETEK P500, OR APPROVED EQUAL 2.5 INCH DIAMETER FACE, 15-1000 PSI RANGE, STEEL CASE, BRASS MOVEMENT CONSTRUCTION, LIQUID FILLED, 1/4-INCH NPT

7. ALL HEAT TAPE SHALL BE RAYCHEM, OMEGALUX OR APPROVED EQUAL. SELF REGULATING LONG ENOUGH TO COVER ALL PIPING, AND ABLE TO BE CONNECTED TO AN ELECTRICAL SOURCE. CONTRACTOR SHALL BE SOLELY RESPONSIBLE FOR DETERMINING LENGTH OF HEAT TAPE, AND APPROPRIATE NUMBER OF COILS.

8. INSULATING JACKETS FOR METERS, PRESSURE REDUCING VALVES AND DUAL CHECK VALVE ASSEMBLIES SHALL BE FORBES MARSHALL, THERMA XX, OR APPROVED EQUAL.

9. ALL METERS AND ASSOCIATED RADIO READ MODULES SHALL BE COMPATIBLE WITH NEW ENGLAND MUNICIPAL RESEARCH CENTER (NEMRC) ACCOUNTING AND BILLING MODULE. CONTRACTOR SHALL BE RESPONSIBLE FOR SPEAKING WITH SUPPLIERS PRIOR TO REBID, AND PROVIDING WRITTEN VERIFICATION OF COMPATIBILITY TO ENGINEER PRIOR TO ORDERING MATERIALS.

10. ALL PLUMBING WORK SHALL CONFORM TO FEDERAL, STATE AND LOCAL PLUMBING CODES, WITH PROPER LEAD FREE CERTIFICATION AS APPROPRIATE.

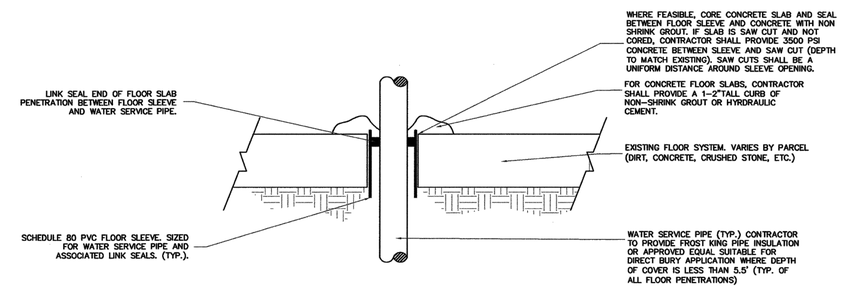

FLOOR PIPE PENETRATION DETAIL

NOT TO SCALE

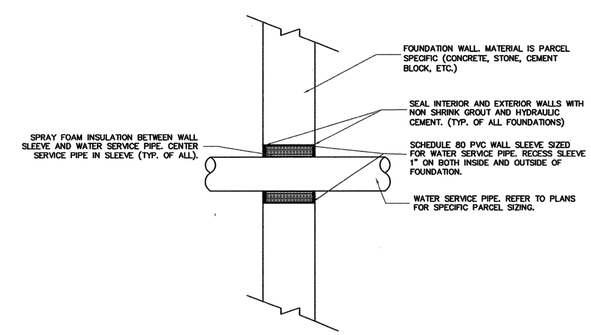

FOUNDATION WALL PENETRATION AND SLEEVE DETAIL - PROFILE

NOT TO SCALE

BID SET
NOT FOR CONSTRUCTION 7/16/2026

DuBois & King inc.
www.dubois-king.com
© Copyright 2026 DuBois & King inc.

STATE OF VERMONT — DAVID A. BOSCHEN — No. 9316 — PROFESSIONAL ENGINEER — 07-16-2026

BID SET
NOT FOR CONSTRUCTION

REVISIONS			
NUMBER	DATE	REVISION DESCRIPTION	BY

CLIENT NAME
TOWN OF WAITSFIELD

PROJECT NAME
WAITSFIELD COMMUNITY WASTEWATER SYSTEM

PROJECT ADDRESS
4144 MAIN STREET
WAITSFIELD, VERMONT 05673

SHEET TITLE
CONTRACT NO. 2
WATER SERVICE DETAILS

D&K PROJECT #	PROJ. ENG.
227947	JBA
DRAWN BY	CHECKED BY
EBS	DDC

DATE
JULY 2026

SHEET NUMBER
C62

I:\2\227947 Waitsfield Water and Wastewater Feasibility Stud\Drawings\Civil\227974-DT01.dwg 8/27/2026 11:32 AM

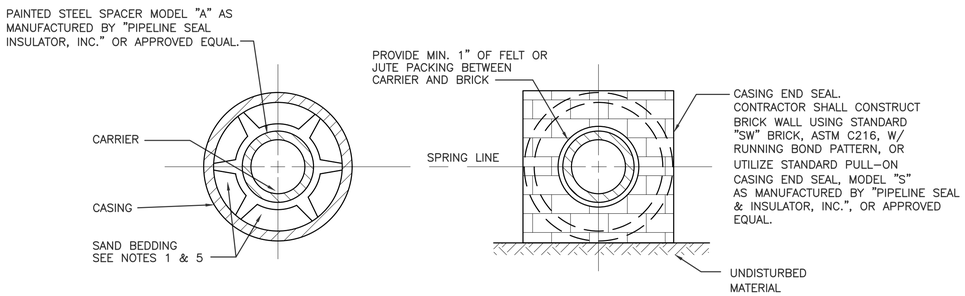

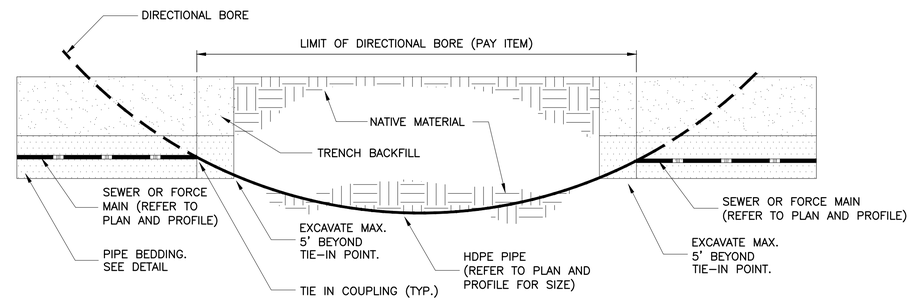

DIRECTIONAL BORING DETAIL

NOT TO SCALE

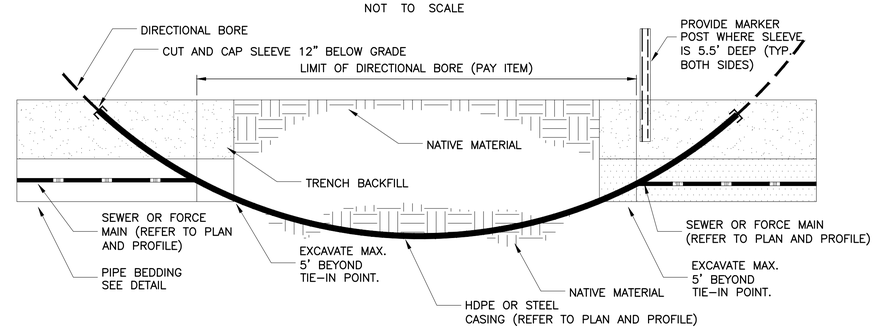

DIRECTIONAL BORING DETAIL FOR PIPE SLEEVE

NOT TO SCALE

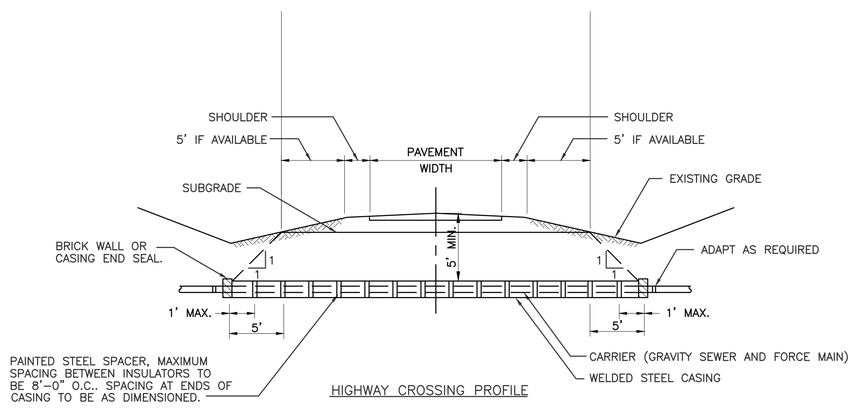

NOTES:

1. SAND BEDDING SHALL BE PLACED TO SPRING LINE OF CARRIER PIPE FOR GRAVITY SEWERS & SHALL ENCASE CARRIER PIPE FOR PRESSURE SYSTEMS.
2. CASING TO BE INSTALLED AT SLOPE OF CARRIER.
3. CARRIER TO BE CENTERED IN CASING.
4. SINGLE COURSE OF BRICK TO BE USED IN CONSTRUCTION OF EACH WALL. WALL TO BE TIGHT AGAINST CASING TO PREVENT LOSS OF SAND OR INFILTRATION OF OUTSIDE MATERIAL.
5. SAND OR "GRITS" (WITHOUT FINES) SHALL BE HYDRAULICALLY PLACED OR AIR-BLOWN INTO PLACE. CONTRACTOR SHALL TAKE PRECAUTIONS TO PREVENT CARRIER PIPES FROM FLOATING.
6. HIGHWAY CROSSINGS SHALL BE PER VTRANS STANDARD D-20 AND THE 2024 SPECIFICATIONS (METHODS & MATERIALS)

JACK AND BORE HIGHWAY CROSSING DETAIL

NOT TO SCALE

BID SET
NOT FOR CONSTRUCTION 7/16/2026

DuBois & King inc.
www.dubois-king.com
© Copyright 2026 DuBois & King inc.

STATE OF VERMONT
ASHLEY B. DUBOIS
PROFESSIONAL ENGINEER
07-16-2026

BID SET
NOT FOR CONSTRUCTION

REVISIONS			
NUMBER	DATE	REVISION DESCRIPTION	BY

CLIENT NAME
TOWN OF WAITSFIELD

PROJECT NAME
WAITSFIELD COMMUNITY WASTEWATER SYSTEM

PROJECT ADDRESS
4144 MAIN STREET
WAITSFIELD, VERMONT 05673

SHEET TITLE
CONTRACT NO. 2
GENERAL DETAILS

D&K PROJECT #	PROJ. ENG.
227947	JBA
DRAWN BY	CHECKED BY
EBS	DDC

DATE
JULY 2026

SHEET NUMBER
C63

I:\2\227947 Waitsfield Water and Wastewater Feasibility Stud\Drawings\Civil\227974-DT01.dwg 8/27/2026 11:32 AM

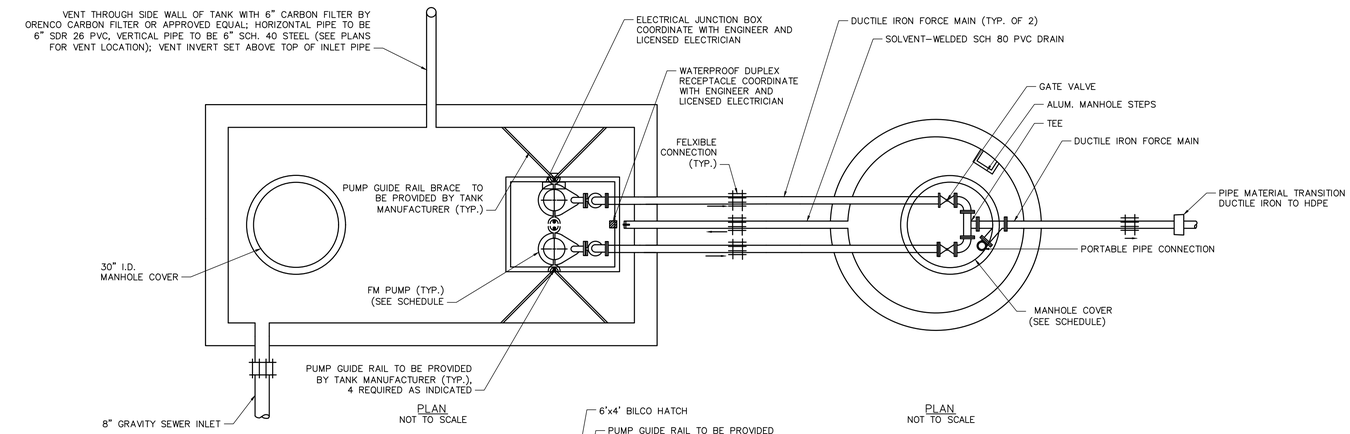

PLAN
NOT TO SCALE

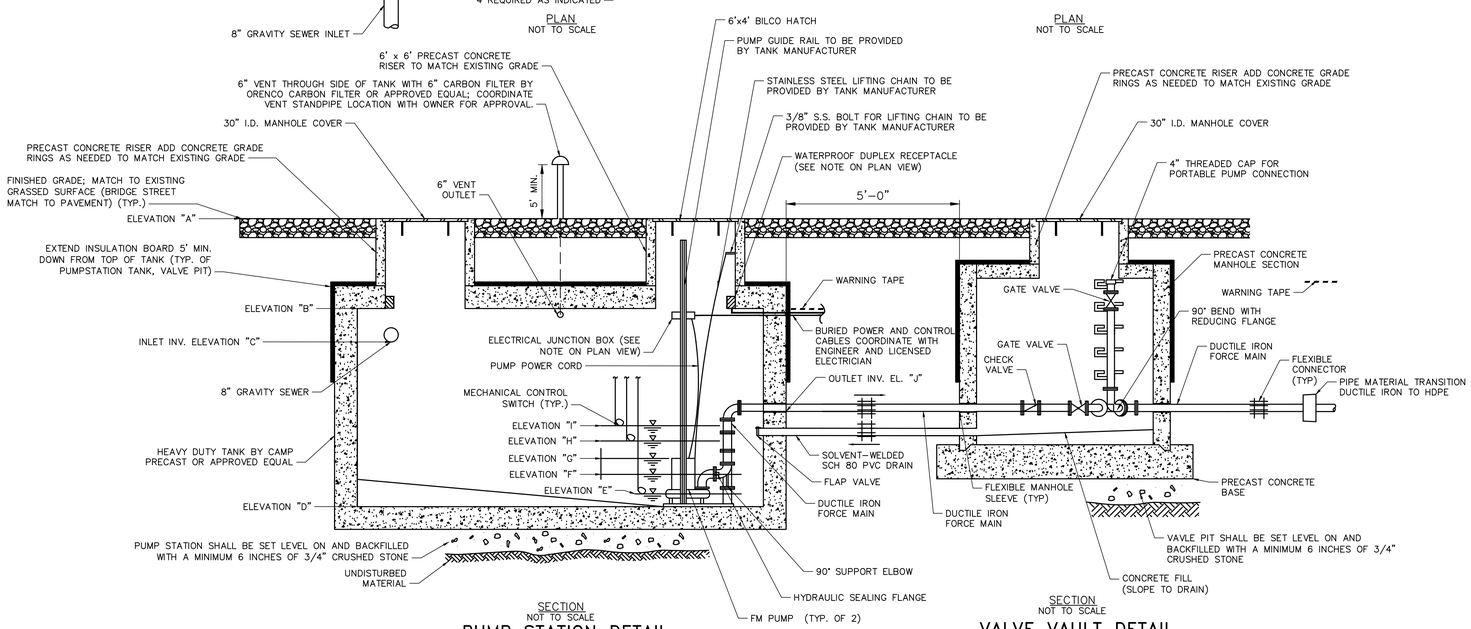

SECTION
NOT TO SCALE
PUMP STATION DETAIL
NOT TO SCALE

PLAN
NOT TO SCALE

SECTION
NOT TO SCALE
VALVE VAULT DETAIL
NOT TO SCALE

TANKS AND VALVE VAULTS SCHEDULE			
LOCATION	TANK	CONSTRUCTION	QUANTITY
FIDDLER'S GREEN	8,500 GALLON SEPTIC TANK 19,000 GALLON PUMP STATION 8'ø VALVE VAULT	PRE-CAST CAST-IN-PLACE PRECAST	4 1 1
UPPER IRASVILLE	15,000 GALLON PUMP STATION 8'ø VALVE VAULT	CAST-IN-PLACE PRE-CAST	1 1
BRIDGE STREET	5,500 GALLON PUMP STATION 8'ø VALVE VAULT	PRE-CAST PRE-CAST	1 1
CHURCH	6,500 GALLON PUMP STATION 8'ø VALVE VAULT	PRE-CAST PRE-CAST	1 1
SCHOOL	21,600 GALLON SEPTIC TANK 9,500 GALLON SEPTIC TANK 20,000 GALLON PUMP STATION 8'ø VALVE VAULT	CAST-IN-PLACE PRE-CAST CAST-IN-PLACE PRE-CAST	1 1 1 1
STA 146+00	1,000 GALLON HEAVY DUTY GREASE TRAP	PRE-CAST	1

NOTE:
REFER TO STRUCTURAL PLAN SHEETS FOR CAST-IN-PLACE TANKS

DUPLEX PUMP STATION ELEVATIONS SCHEDULE					
LOCATION	FIDDLER'S GREEN	UPPER IRASVILLE	BRIDGE STREET	CHURCH	SCHOOL
FINISHED GRADE EL. "A"	719.4	762.5	694.7	690.7	691.3
CEILING EL. "B"	710.5	753.3	688.9	685.3	682.0
INVERT INLET EL. "C"	709.5	752.3	687.9	684.3	680.7
BOTTOM WET WELL EL. "D"	702.0	745.8	680.4	676.6	673.0
PUMP INLET EL. "E"	704.0	747.8	681.9	678.1	675.0
LOW ALARM EL. "F"	704.5	748.3	682.4	678.6	675.5
PUMPS OFF EL. "G"	705.0	748.8	683.4	679.1	676.0
PUMPS ON EL. "H"	707.0	749.8	684.4	680.3	677.5
ALARM ON EL. "I"	707.5	750.3	684.9	681.3	678.5
INVERT OUTLET EL. "J"	TBD	TBD	TBD	TBD	TBD

NOTE:
CONTRACTOR SHALL PREPARE A COMPLETE O&M MANUAL FOR THE PUMPS AND WASTEWATER PUMPING STATION

PUMP STATION DIMENSIONS SCHEDULE					
LOCATION	DIMENSIONS	VOLUME	DOSE VOLUME	DOSES/DAY	EMERGENCY STORAGE PROVIDED
FIDDLER'S GREEN	15' X 25' X 8.5'	24,000 GALLONS	4,343 GALLONS	10	11,085 GALLONS
UPPER IRASVILLE	14' X 24' X 7.5'	19,000 GALLONS	2,763 GALLONS	12	8,547 GALLONS
BRIDGE STREET	8' X 16' X 8.1'	5,500	960 GALLONS	4	3,985 GALLONS
CHURCH	8' X 16' X 9.1'	6,500 GALLONS	1,158 GALLONS	4	4,750 GALLONS
SCHOOL	12' X 24' X 9'	19,500 GALLONS	3,212 GALLONS	12	9,715 GALLONS

PUMP SCHEDULE								
LOCATION	MAKE	MODEL	HEAD	FLOW	VOLTS	AMPS	PHASES	Hz
FIDDLER'S GREEN	SULZER	XFP101G	135	445	460	35.1	3	60
UPPER IRASVILLE	SULZER	XFP100E	48.5	215	460	9.9	3	60
BRIDGE STREET	SULZER	XFP80C	22	260	460	4.2	3	60
CHURCH	SULZER	XFP100C	26	290	460	5.2	3	60
SCHOOL	SULZER	XFP101G	165	340	460	35.1	3	60

PUMP STATION INSTALLATION INSTRUCTIONS:
1. PUMP STATION SHALL BE AS THE CAPACITY SHOWN ON THE DRAWINGS. ANY "STANDARD" OPENINGS SHALL BE REPLACED BY THE PENETRATIONS SHOWN ON THE DRAWINGS.
2. CONTRACTOR SHALL PREPARE ALL APPLICABLE SUBMITTAL & SHOP DRAWING INFORMATION FOR ENGINEER REVIEW AND APPPROVAL PRIOR TO ORDERING ANY COMPONENT OF THE PUMP STATION.
3. CONTRACTOR SHALL INSTALL A BAFFLE ON THE INLET PIPE OF THE PUMP STATION.
4. ASPHALTIC MASTIC IS REQUIRED AT ALL CONCRETE JOINTS, WITH A MINIMUM THICKNESS OF 1/2".
5. ALL LIFTING RINGS, PIPE PENETRATIONS, TANK SECTIONS SHALL BE SEALED ON THE INTERIOR & EXTERIOR OF THE TANK WITH NON-SHRINK GROUT.
6. TANK SHALL BE FILLED WITH WATER AND TESTED FOR TIGHTNESS PRIOR TO BACKFILL OF THE STRUCTURE.
7. ALL HORIZONTAL & VERTICAL LAYOUT SHALL BE THE RESPONSIBILITY OF THE CONTRACTOR. AT ANY TIME THE ENGINEER MAY ASK FOR LINE AND GRADE TO BE CHECKED IN THE PRESENCE.
8. CONTRACTOR SHALL INSTALL RAIL SYSTEM FOR MAINTAINING PUMPS
9. ALL PENETRATIONS SHALL HAVE WATER TIGHT SNAP AND SEAL BOOTS WITH STAINLESS STEEL HARDWARE.
10. EXTERIOR OF THE STRUCTURE SHALL BE COATED WITH APPROVED BITUMINOUS COATING.
11. PROVIDE CONTINUOUS FEEDERS FROM PUMPS AND FLOATS TO CONTROL PANEL.
12. ULTRASONIC LEVEL TRANSMITTERS TO BE INSTALLED IN FIDDLER'S GREEN, IRASVILLE, AND SCHOOL PUMP STATIONS AND CONFIGURED TO COMMUNICATE WITH CONTRACT 2 SCADA SYSTEM VIA INTERNET CONNECTION.

PUMP STATION CONTROL NOTES:
CONTRACTOR SHALL PROVIDE ALL HARDWARE, SOFTWARE, MATERIALS, LABOR AND EQUIPMENT TO ACCOMPLISH THE FOLLOWING:
1. PUMPS SHALL SHUTDOWN AT SET POINTS PROVIDED
2. ALARMS (BOTH VISUAL AND AUDIO) SHALL BE PROVIDED FOR HIGH WATER ALARM.
3. IN ADDITION VISUAL AND AUDIO ALARMS SHALL BE PROVIDED FOR PUMP FAILURE.
4. CONTROL PANEL NEEDS TO BE INSTALLED IN COORDINATION WITH OWNER, AND ELECTRICAL TO BE INSTALLED BY LICENSED ELECTRICIAN.
5. CONTROL PANEL SHALL HAVE THE FOLLOWING CAPABILITIES:
   5.1. PUMP #1 & PUMP #2 : OFF/HAND/AUTO
   5.2. TRACK THE RUN TIME FOR EACH PUMP
   5.3. TRACK THE # OF CYCLES FOR EACH PUMP.
6. CONTRACTOR SHALL PROVIDE A MUTE BUTTON FOR BOTH THE INSIDE AND OUTSIDE OF THE CONTROL PANEL FOR MAKING THE AUDIBLE ALARM.

BID SET
NOT FOR CONSTRUCTION 7/16/2026

DuBois & King inc.
www.dubois-king.com
© Copyright 2026 DuBois & King inc.

STATE OF VERMONT
JASHEE B. PATEL
NO. 9000
PROFESSIONAL ENGINEER
07-16-2026
BID SET
NOT FOR CONSTRUCTION

REVISIONS

NUMBER	DATE	REVISION DESCRIPTION	BY

CLIENT NAME
TOWN OF WAITSFIELD

PROJECT NAME
WAITSFIELD COMMUNITY WASTEWATER SYSTEM

PROJECT ADDRESS
4144 MAIN STREET
WAITSFIELD, VERMONT 05673

SHEET TITLE
CONTRACT NO. 2
PUMP STATION DETAILS

D&K PROJECT #	PROJ. ENG.
227947	JBA
DRAWN BY	CHECKED BY
EBS	DDC

DATE
JULY 2026

SHEET NUMBER
C64

SHEET: 69 of 86

I:\2\227947 Waitsfield Water and Wastewater Feasibility Stud\Drawings\Civil\227947-PS-det.dwg 8/27/2026 11:32 AM

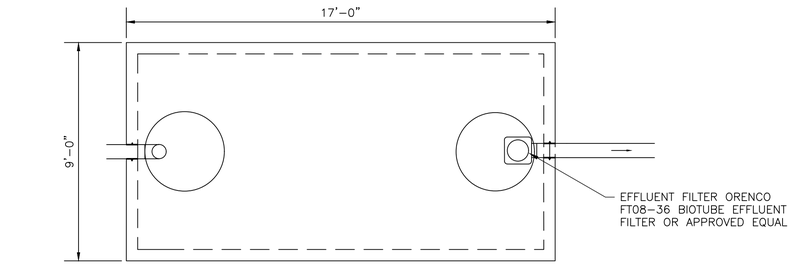

ELEMENTARY SCHOOL CAST-IN-PLACE SEPTIC TANK ELEVATION SCHEDULE	
GROUND ELEVATION "A"	692.4
INLET INVERT ELEVATION "B"	681.2
FLOOR ELEVATION "C"	673.2
OUTLET INVERT ELEVATION "D"	680.8

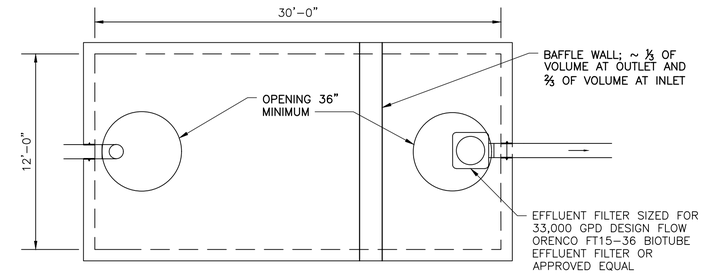

CAST-IN-PLACE NOTES:

1. TANK CAPACITY SHALL BE MEASURED BELOW THE LOWEST PIPE. REQUIRED TANK CAPACITIES ARE SHOWN ON C64.
2. SEE STRUCTURAL DETAILS

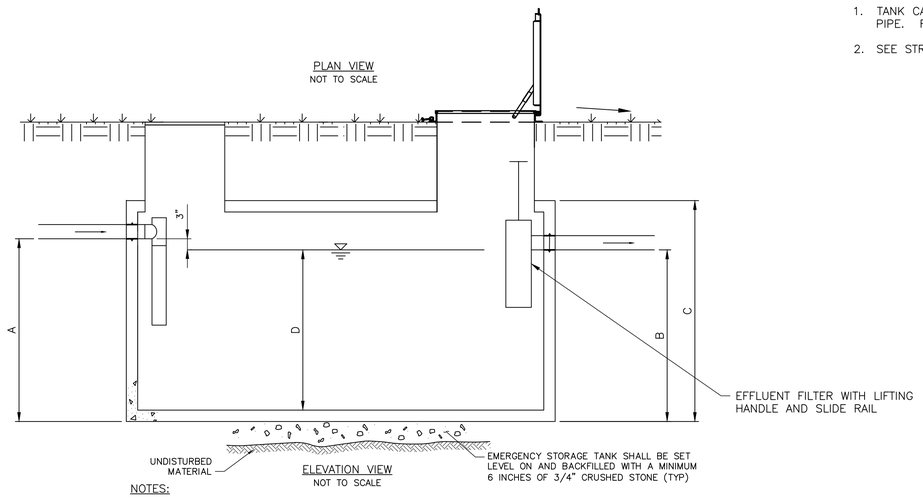

NOTES:

1. PRE-CAST SECTIONS SHALL MEET THE LOADING RATES LISTED AND SHALL BE IN ACCORDANCE WITH ASTM C 478, LATEST REVISIONS

8' X 16' PRE-CAST TANK DETAIL

NOT TO SCALE

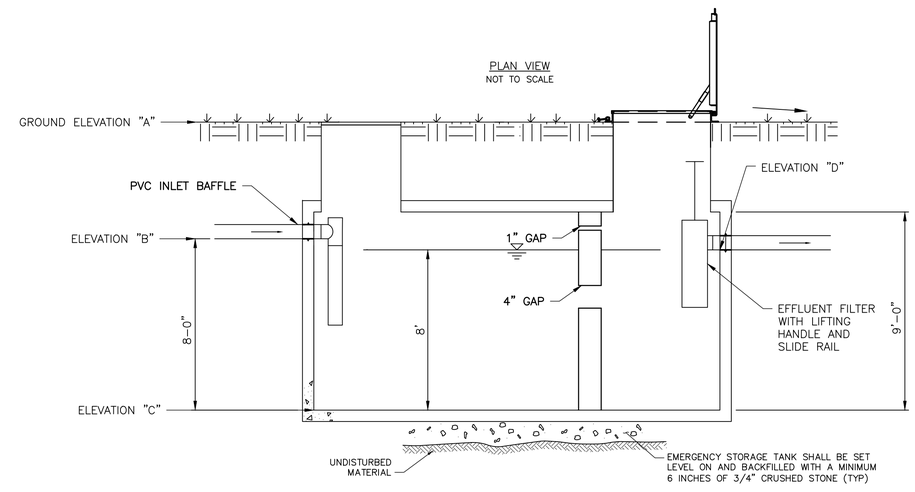

21,600 GALLON CAST-IN-PLACE SEPTIC TANK DETAIL

NOT TO SCALE

8' X 16' PRE-CAST TANK SCHEDULE								
DESCRIPTION	QUANTITY	STRUCTURAL LOADING	VOLUME	DESIGN FLOW	INLET HEIGHT "A"	OUTLET HEIGHT "B"	TANK HEIGHT "C"	LIQUID DEPTH "D"
FIDDLER'S GREEN	4	H-10	8,500 GALLONS	43,434 GALLONS	9'-10"	9'-7"	11'-4"	8'-11"
BRIDGE STREET PS	1	H-20	5,500 GALLONS	3,841 GALLONS	6'-8"	6'-5"	8'-4"	5'-9"
CHURCH PS	1	H-10	6,500 GALLONS	4,631 GALLONS	7'-9"	7'-6"	9'-4"	6'-10"
SCHOOL SECONDARY TANK	1	H-10	9,500 GALLONS	38,541 GALLONS	10'-11"	10'-8"	12'-4"	10'-0"

SEPTIC TANK NOTES:

1. TANK CAPACITY SHALL BE MEASURED BELOW THE OUTLET INVERT. REQUIRED TANK CAPACITIES ARE SHOWN ON SHEET C64.
2. COVERS SHALL BE LOCKED OR BOLTED TO THE RISERS SO THAT TOOLS OR A KEY ARE REQUIRED FOR REMOVAL.
3. C
4. CONVERS AND RISERS SHALL MEET THE REQUIRED STRUCTURAL LOADING OF THE TANKS
5. CONCRETE SHALL HAVE A MINIMUM STRENGTH 5,000 PSI @ 28 DAYS. TANK SUPPLIER SHALL CERTIFY TANK'S ABILITY TO WITHSTAND EXPECTED LOADING CONDITIONS.
6. TANK SHALL BE OF WATER TIGHT CONSTRUCTION WITH ASPHALTIC MASTIC OR BITUMASTIC GASKETS AT ALL CONCRETE JOINTS.. AFTER INSTALLATION, TANK SHALL BE TESTED FOR WATERTIGHTNESS PRIOR TO BEING PLACED INTO SERVICE.
7. CONTRACTOR SHALL PROVIDE PRODUCT SUBMITTALS & SHOP DRAWINGS FOR ENGINEER REVIEW AND APPROVAL PRIOR TO ORDERING ANY COMPONENT OF THE SEPTIC TANK.
8. CONTRACTOR SHALL INSTALL A TEE BAFFLE ON THE INLET PIPE OF THE SEPTIC TANK. SEPTIC TANK OUTLET SHALL BE FITTED WITH AN EFFLUENT FILTER MEETING THE STATE OF VERMONT STANDARDS AND RATED FOR AT THE DESIGN FLOW OF EACH TANK.
9. ALL HORIZONTAL & VERTICAL LAYOUT SHALL BE THE RESPONSIBILITY OF THE CONTRACTOR. AT ANY TIME THE ENGINEER MAY ASK FOR LINE AND GRADE TO BE CHECKED IN THE PRESENCE.
10. ALL PENETRATIONS SHALL HAVE WATER-TIGHT, FLEXIBLE BOOTS WITH STAINLESS STEEL HARDWARE. ANY "STANDARD" OPENINGS SHALL BE REPLACED BY THE PENETRATIONS SHOWN ON THE DRAWINGS.
11. EXTERIOR OF THE STRUCTURE SHALL BE COATED WITH APPROVED BITUMINOUS COATING.

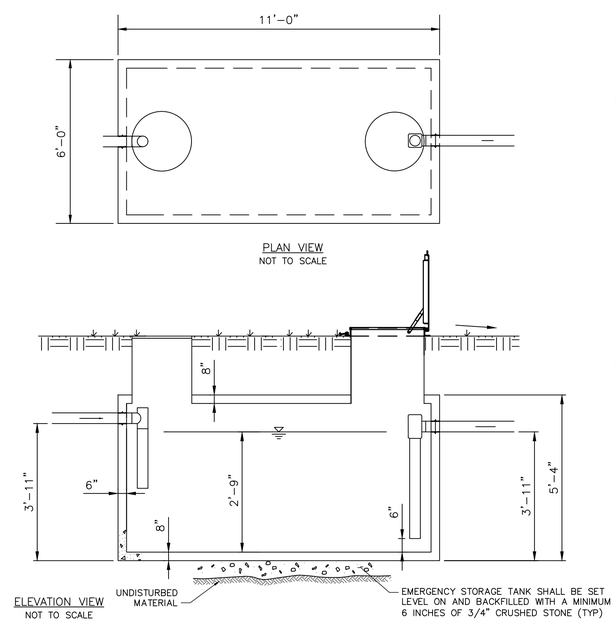

1,000 GALLON HEAVY DUTY PRE-CAST GREASE TRAP DETAIL

NOT TO SCALE

GREASE TRAP NOTES:

1. TANK CAPACITY SHALL BE MEASURED BELOW THE OUTLET INVERT. REQUIRED TANK CAPACITIES ARE SHOWN ON SITE SHEET C64.
2. COVERS SHALL BE LOCKED OR BOLTED TO THE RISERS SO THAT TOOLS OR A KEY ARE REQUIRED FOR REMOVAL.
3. CONCRETE SHALL HAVE A MINIMUM STRENGTH 5,000 PSI @ 28 DAYS. TANK SUPPLIER SHALL CERTIFY TANK'S ABILITY TO WITHSTAND EXPECTED LOADING CONDITIONS.
4. TANK SHALL BE OF WATER TIGHT CONSTRUCTION WITH ASPHALTIC MASTIC OR BITUMASTIC GASKETS AT ALL CONCRETE JOINTS.. AFTER INSTALLATION, TANK SHALL BE TESTED FOR WATERTIGHTNESS PRIOR TO BEING PLACED INTO SERVICE.
5. CONTRACTOR SHALL PROVIDE PRODUCT SUBMITTALS & SHOP DRAWINGS FOR ENGINEER REVIEW AND APPROVAL PRIOR TO ORDERING ANY COMPONENT OF THE SEPTIC TANK.
6. CONTRACTOR SHALL INSTALL INLET AND OUTLET BAFFLES.
7. ALL HORIZONTAL & VERTICAL LAYOUT SHALL BE THE RESPONSIBILITY OF THE CONTRACTOR. AT ANY TIME THE ENGINEER MAY ASK FOR LINE AND GRADE TO BE CHECKED IN THE PRESENCE.
8. ALL PENETRATIONS SHALL HAVE WATER-TIGHT, FLEXIBLE BOOTS WITH STAINLESS STEEL HARDWARE. ANY "STANDARD" OPENINGS SHALL BE REPLACED BY THE PENETRATIONS SHOWN ON THE DRAWINGS.
9. EXTERIOR OF THE STRUCTURE SHALL BE COATED WITH APPROVED BITUMINOUS COATING.

BID SET
NOT FOR CONSTRUCTION 7/16/2026

DuBois & King inc.
www.dubois-king.com
© Copyright 2026 DuBois & King inc.

STATE OF VERMONT — ASHLEY BOUCHARD — PROFESSIONAL ENGINEER — 07-16-2026
BID SET NOT FOR CONSTRUCTION

REVISIONS			
NUMBER	DATE	REVISION DESCRIPTION	BY

CLIENT NAME
TOWN OF WAITSFIELD

PROJECT NAME
WAITSFIELD COMMUNITY WASTEWATER SYSTEM

PROJECT ADDRESS
4144 MAIN STREET
WAITSFIELD, VERMONT 05673

SHEET TITLE
CONTRACT NO. 2
SEPTIC TANK DETAILS

D&K PROJECT #	PROJ. ENG.
227947	JBA
DRAWN BY	CHECKED BY
EBS	DDC

DATE
JULY 2026

SHEET NUMBER
C65

I:\2\227947 Waitsfield Water and Wastewater Feasibility Stud\Drawings\Civil\227947-PS-det.dwg 8/27/2026 11:32 AM

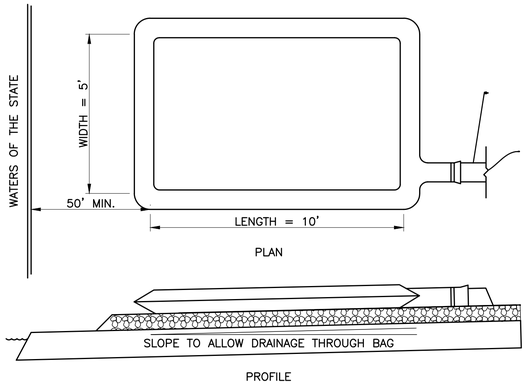

FILTER BAG DETAIL

NOT TO SCALE

NOTES:

1. THE PRIMARY PURPOSE OF FILTER BAG IS TO RETAIN SILT, SAND, AND FINES DURING DEWATERING OPERATIONS.
2. FILTER BAGS SHALL BE INSTALLED ON A VEGETATED SLOPE GRADED TO ALLOW INCOMING WATER TO FLOW THROUGH THE BAG.
3. FILTER BAGS MAY ALSO BE PLACED ON COARSE AGGREGATE, STONE, OR HAYBALES TO INCREASE FILTRATION EFFICIENCY.
4. FILTER BAGS SHALL BE LOCATED A MINIMUM OF 50' FROM WATERS OF THE STATE UNLESS OTHERWISE APPROVED BY THE ENGINEER.
5. THE NECK OF THE FILTER BAG SHALL BE STRAPPED TIGHTLY TO THE DISCHARGE HOSE.
6. A FILTER BAG IS FULL WHEN IT NO LONGER CAN EFFICIENTLY FILTER SEDIMENT OR ALLOW WATER TO PASS AT A REASONABLE RATE.
7. FILTER BAG SHALL BE DISPOSED OF AS APPROVED IN THE EPSC NOTES OR AS DIRECTED BY THE ENGINEER.

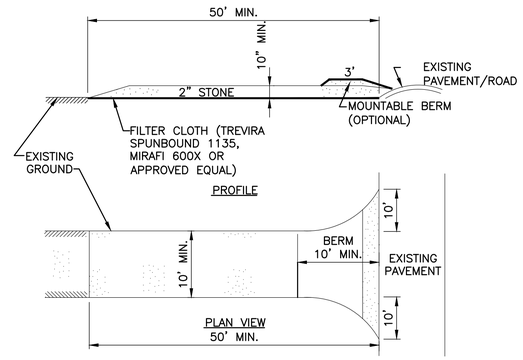

STABILIZED CONSTRUCTION ENTRANCE

NOT TO SCALE

1. FILTER CLOTH – WILL BE PLACED OVER THE ENTIRE AREA PRIOR TO PLACEMENT OF STONE.
2. SURFACE WATER – ALL SURFACE WATER FLOWING OR DIVERTED TOWARD CONSTRUCTION ENTRANCES SHALL BE PIPED ACROSS THE ENTRANCE. IF PIPING IS IMPRACTICAL, A MOUNTABLE BERM WITH 5:1 SLOPES WILL BE PERMITTED.
3. MAINTENANCE – THE ENTRANCE SHALL BE MAINTAINED IN A CONDITION WHICH WILL PREVENT TRACKING OR FLOWING OF SEDIMENT ONTO PUBLIC RIGHTS–OF–WAY. THIS MAY REQUIRE PERIODIC TOP DRESSING WITH ADDITIONAL STONE AS CONDITIONS DEMAND AND REPAIR AND/OR CLEAN–OUT OF ANY MEASURES USED TO TRAP SEDIMENT. ALL SEDIMENT SPILLED, DROPPED, WASHED OR TRACKED ONTO PUBLIC RIGHTS–OF–WAY MUST BE REMOVED IMMEDIATELY.
4. WASHING – WHEELS SHALL BE CLEANED TO REMOVE SEDIMENT PRIOR TO ENTRANCE ONTO PUBLIC RIGHTS–OF–WAY. WHEN WASHING IS REQUIRED, IT SHALL BE DONE ON AN AREA STABILIZED WITH STONE AND WHICH DRAINS INTO AN APPROVED SEDIMENT TRAPPING DEVICE.
5. PERIODIC INSPECTION AND NEEDED MAINTENANCE SHALL BE PROVIDED AFTER EACH RAIN EVENT.

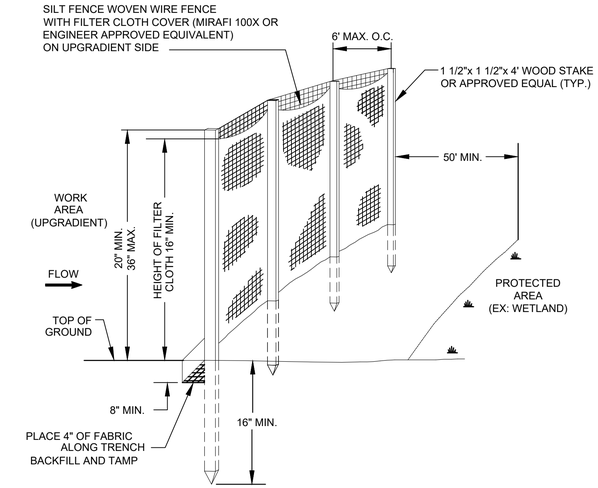

TEMPORARY SILT FENCE BARRIER

NOT TO SCALE

GENERAL DESCRIPTION
TEMPORARY SILT FENCE BARRIER CONSISTING OF FILTER FABRIC ATTACHED TO SUPPORTING POSTS AND ENTRENCHED IN SOIL. INSTALLED ACROSS OR AT THE TOE OF A SLOPE TO INTERCEPT AND RETAIN SMALL AMOUNTS OF SEDIMENT FROM DISTURBED OR UNPROTECTED AREAS.

PURPOSE
1. FUNCTIONS PRIMARILY TO SLOW AND POND WATER AND ALLOW SOIL PARTICLES TO SETTLE. USE LIMITED TO AREAS WHERE OVERLAND SHEET FLOWS ARE EXPECTED. DO NOT USE ACROSS STREAMS, CHANNELS, SWALES, DITCHES OR OTHER DRAINAGE WAYS.
2. IS A SEDIMENT CONTROL PRACTICE, NOT AN EROSION CONTROL PRACTICE. INTENDED TO BE USED IN CONJUNCTION WITH OTHER PRACTICES THAT PREVENT OR CONTROL EROSION.

CONSIDERATIONS
TEMPORARY SILT FENCE BARRIERS USED WHERE:
- MAXIMUM LENGTH OF SLOPE ABOVE THE BARRIER IS 100 FEET; AND
- MAXIMUM GRADIENT ABOVE THE BARRIER IS 50 PERCENT (2:1); AND
- CONTRIBUTING DRAINAGE AREA IS LESS THAN 1/4 ACRE PER 100 FEET OF BARRIER LENGTH; AND
- IF ANY OF THESE CONDITIONS ARE EXCEEDED, OTHER MEASURES MAY BE NECESSARY

SPECIFICATIONS
1. INSTALL PRIOR TO ANY SOIL DISTURBANCE OF THE CONTRIBUTING DRAINAGE AREA ABOVE THEM.
2. INSTALL FOLLOWING CONTOUR OF THE LAND AS CLOSELY AS POSSIBLE.
3. SILT FENCE PLACED AT THE BOTTOM OF A SLOPE SHOULD BE SET AT LEAST 6 FEET FROM THE TOE TO ALLOW SPACE FOR SHALLOW PONDING AND MAINTENANCE ACCESS WITHOUT DISTURBING THE SLOPE.
4. EMBED FABRIC A MINIMUM OF 4 INCHES IN DEPTH AND 4 INCHES IN WIDTH IN TRENCH EXCAVATED INTO THE GROUND ALONG THE LINE OF POSTS AND UPGRADIENT FROM BARRIER. IF SITE CONDITIONS INCLUDE FROZEN GROUND, LEDGE, OR THE PRESENCE OF HEAVY ROOTS, EMBED BASE OF FABRIC WITH A MINIMUM THICKNESS OF 8 INCHES OF ¾–INCH STONE.
5. BACKFILL TRENCH AND COMPACT SOIL OVER THE FILTER FABRIC.
6. SIZE AND ANCHOR SUPPORT POSTS ACCORDING TO THE MANUFACTURER'S INSTRUCTIONS WITH MAXIMUM POST SPACING OF 6 FEET;
7. FILTER FABRIC TO BE A CONTINUOUS ROLL CUT TO THE LENGTH OF THE BARRIER TO AVOID USE OF JOINTS. WHEN JOINTS ARE NECESSARY, SPLICE FILTER CLOTH TOGETHER ONLY AT SUPPORT POST, WITH A MINIMUM 6–INCH OVERLAP (24 INCHES PREFERRED), AND STAPLE TO SUPPORT POST. IF METAL POSTS USED, WIRE–TIE FABRIC DIRECTLY TO THE POSTS WITH THREE DIAGONAL TIES.
8. SILT FENCE NOT TO BE STAPLED OR NAILED TO TREES.
9. FILTER FABRIC TO BE PERVIOUS SHEET OF PROPYLENE, NYLON, POLYESTER OR ETHYLENE YARN AND CERTIFIED BY THE MANUFACTURER OR SUPPLIER.
10. FILTER FABRIC TO CONTAIN ULTRAVIOLET RAY INHIBITORS AND STABILIZERS TO PROVIDE A MINIMUM OF 6 MONTHS OF EXPECTED USABLE CONSTRUCTION LIFE AT A TEMPERATURE RANGE OF 0 DEGREES FAHRENHEIT TO 120 DEGREES FAHRENHEIT.
11. POSTS FOR SILT FENCE TO BE EITHER 2–INCH SQUARE WOOD OR 1.33 POUNDS PER LINEAR FOOT STEEL WITH A MINIMUM LENGTH OF 5 FEET. STEEL POSTS TO HAVE PROJECTIONS FOR FASTENING WIRE TO THEM. POSTS TO BE PLACED ON THE DOWNSLOPE SIDE OF THE FABRIC.
12. HEIGHT OF A SILT FENCE NOT TO EXTEND MORE THAN 36 INCHES ABOVE ORIGINAL GROUND SURFACE
13. MANUFACTURED SILT FENCE SYSTEM WITH INTEGRAL POSTS MAY BE USED.
14. SILT FENCE TO BE INSTALLED WITH "SMILES" OR "J–HOOKS" TO REDUCE THE DRAINAGE AREA THAT ANY SEGMENT WILL IMPOUND. FLARE ENDS OF FENCE UPSLOPE.

MAINTENANCE REQUIREMENTS
1. INSPECT AND MAINTAIN IMMEDIATELY AFTER EACH RAINFALL AND AT LEAST DAILY DURING PROLONGED RAINFALL.
2. REMOVE SEDIMENT DEPOSITION, AT A MINIMUM, WHEN DEPOSITION ACCUMULATES TO ONE–HALF THE HEIGHT OF THE FENCE, AND MOVE SO SEDIMENT NOT READILY TRANSPORTED BACK TOWARD THE SILT FENCE.
3. REPAIR SILT FENCE IMMEDIATELY IF THERE ARE ANY SIGNS OF EROSION OR SEDIMENTATION BELOW THEM. IF THERE ARE SIGNS OF UNDERCUTTING AT THE CENTER OR THE EDGES OF BARRIER, OR IMPOUNDING OF LARGE VOLUMES OF WATER BEHIND THEM, SILT FENCE BARRIERS TO BE REPLACED WITH NEW SILT FENCE.
4. IF SILT FENCE FABRIC DECOMPOSES OR BECOMES INEFFECTIVE PRIOR TO THE END OF THE EXPECTED USABLE LIFE AND THE BARRIER STILL IS NECESSARY, REPLACE FABRIC PROMPTLY.
5. IF EVIDENCE OF END FLOW ON PROPERLY INSTALLED BARRIERS, EXTEND BARRIERS UPHILL OR CONSIDER REPLACING THEM WITH OTHER MEASURES, SUCH AS TEMPORARY DIVERSIONS AND SEDIMENT TRAPS.
6. USEFUL LIFE OF SILT FENCE IS TYPICALLY ONE SEASON. ON LONGER CONSTRUCTION PROJECTS, SILT FENCE TO BE REPLACED PERIODICALLY AS REQUIRED TO MAINTAIN EFFECTIVENESS.
7. AFTER SILT FENCE IS NO LONGER REQUIRED, REMOVE REMAINING SEDIMENT DEPOSITS, REGRADE AREA TO GRADES SHOWN ON THESE DRAWINGS, AND SEED AND MULCH.

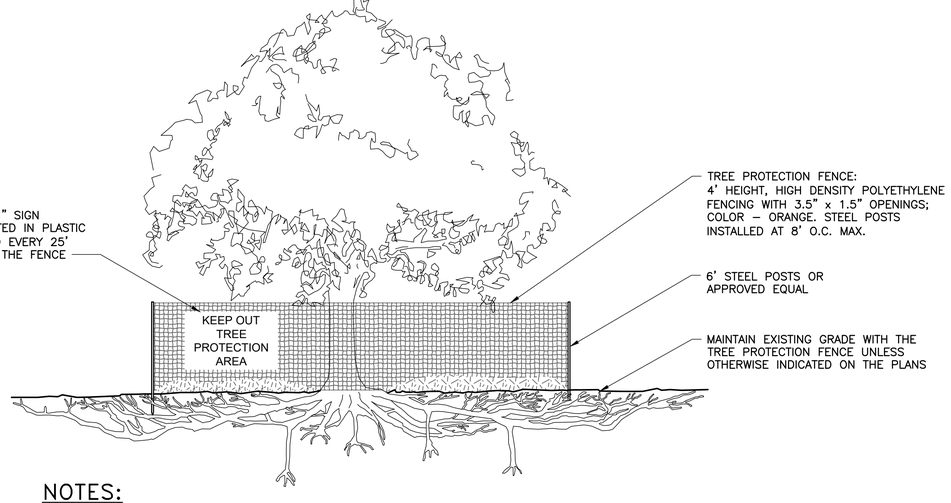

NOTES:

1. TREE PROTECTION FENCING SHALL BE ESTABLISHED AT THE EDGE OF THE TREE PROTECTION AREA INDICATED ABOVE AT THE EDGE OF THE DRIPLINE, OR AS INDICATED ON THE PLANS, OR TO THE MAXIMUM EXTENT POSSIBLE TO THE EDGE OF THE NEAREST LIMIT OF DISTURBANCE OR IMPERVIOUS SURFACE.
2. SEE SPECIFICATIONS FOR ADDITIONAL TREE PROTECTION REQUIREMENTS.
3. TREE PROTECTION FENCING SHALL BE INSTALLED AT THE OUTSET OF SITE WORK (SUCH AS ALONG WITH EPSC CONTROLS) AND MAINTAINED IN POSITION AND FULLY FUNCTIONAL THROUGHOUT SITE ACTIVITY, UNLESS NOTED OTHERWISE IN LIMITED LOCATIONS. SEE EPSC AND LANDSCAPE PLANS FOR ANY MODIFICATIONS TO THE TREE PROTECTION AREA.
4. ANY REQUIRED PRUNING SHALL BE DONE BY AN APPROVED ISA CERTIFIED ARBORIST.
5. NO EQUIPMENT SHALL BE STORED OR OPERATE INSIDE THE TREE PROTECTION FENCE, INCLUDING DURING FENCE INSTALLATION AND REMOVAL.
6. NO MATERIALS SHALL BE STORED INSIDE THE TREE PROTECTION FENCE.
7. IF TREE ROOTS ARE ENCOUNTERED OUTSIDE OF THE TREE PROTECTION FENCING THAT ARE OF 2 INCHES DIAMETER OR GREATER, SUCH ROOTS SHALL BE SAWN BY HAND FLUSH TO THE EDGE OF EXCAVATION.
8. TUNNELING OR HORIZONTAL DRILLING MAY BE REQUIRED PER THE DIRECTION OF THE OWNER'S REPRESENTATIVE. SEE PLANS FOR MORE INFORMATION.

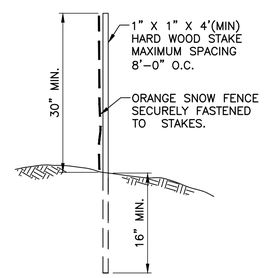

PROJECT DEMARCATION FENCE

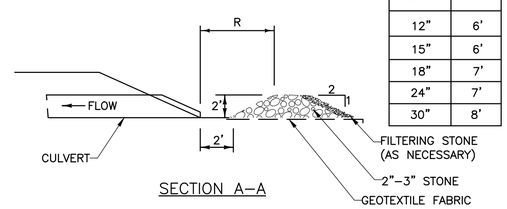

PIPE DIA.	R
12"	6'
15"	6'
18"	7'
24"	7'
30"	8'

PIPE INLET PROTECTION

NOT TO SCALE

BID SET
NOT FOR CONSTRUCTION 7/16/2026

DuBois & King inc.
www.dubois-king.com
© Copyright 2026 DuBois & King inc.

STATE OF VERMONT — BID SET NOT FOR CONSTRUCTION — 07-16-2026

REVISIONS

NUMBER	DATE	REVISION DESCRIPTION	BY

CLIENT NAME
TOWN OF WAITSFIELD

PROJECT NAME
WAITSFIELD COMMUNITY WASTEWATER SYSTEM

PROJECT ADDRESS
4144 MAIN STREET
WAITSFIELD, VERMONT 05673

SHEET TITLE
CONTRACT NO. 2
EPSC DETAILS

D&K PROJECT #	PROJ. ENG.
227947	JBA
DRAWN BY	CHECKED BY
EBS	DDC

DATE
JULY 2026

SHEET NUMBER
C66

I:\227947 Waitsfield Water and Wastewater Feasibility Stud\Drawings\Civil\227974-DT01.dwg 8/27/2026 11:33 AM

POST AND ANCHOR SELECTION CHART

POST SIZE (IN.)	POST THICKNESS (IN.)	POST WEIGHT (LBS/FT.)	POST GAGE	SECTION MODULUS (IN.³)	ONE POST SV	TWO POST SV	THREE POST SV	POSTS PERMITTED IN 8' PATH	ANCHOR SIZE (IN.)	ANCHOR GAGE	MINIMUM ANCHOR LENGTH
1.75	.083	1.88	14	0.222	45	90	135	TWO	2.00	12	30
2.00	.109	2.42	12	0.393	80	160	240	TWO	2.25	12	48
2.50	.109	3.35	12	0.673	137	274	411	ONE	3.00	7	48

NOTES:

1. ALL SIGN POSTS SHALL HAVE 7/16 INCH HOLES EVERY ONE INCH ON CENTER (ALL FOUR SIDES).
2. THE NUMBER OF SIGN POSTS PERMITTED WITHIN AN EIGHT FOOT PATH ASSUMES THAT THE SIGN ASSEMBLY IS NOT PROTECTED BY GUARDRAIL OR IS LOCATED WITHIN A GUARDRAIL'S DEFLECTION DISTANCE DETERMINED PER THE CURRENT "AMERICAN ASSOCIATION OF STATE HIGHWAY AND TRANSPORTATION OFFICIALS" (AASHTO) ROADSIDE DESIGN GUIDE. ADDITIONAL POSTS MAY BE INSTALLED USING SLIP BASES THAT MEET THE AASHTO "MANUAL FOR ASSESSING SAFETY HARDWARE" (MASH). THE APPROPRIATE RESOURCE SHALL BE DETERMINED AS DESCRIBED IN THE MASH PUBLICATION.
3. TO USE THE SELECTION VALUE (SV) COLUMNS IN THE TABLE ABOVE, MULTIPLY A SIGN'S SURFACE AREA IN SQUARE FEET (H × L) BY THE SIGN'S HEIGHT IN FEET MEASURED FROM THE GROUND TO THE CENTROID OF THE SIGN ASSEMBLY (h). THIS RESULT MUST BE LESS THAN OR EQUAL TO THE CORRESPONDING SELECTION VALUE. NOTE THAT FOR SIGNS WITH MULTIPLE POSTS, THE LARGEST HEIGHT DIMENSION SHALL BE USED TO CALCULATE THE POST SELECTION VALUE.
4. THE DESIGN CRITERIA UTILIZED IN SIGN POST AND ANCHOR SELECTION IS AS FOLLOWS: WIND SPEED OF 70 MPH (10 YEAR MEAN RECURRENCE INTERVAL), WIND PRESSURE OF 19 PSF, STEEL MINIMUM YIELD OF 55,000 PSI, AND AN ALLOWABLE STRESS OF 1.4 (0.60 FY).

CORNER BOLT INSTALLATION DETAIL

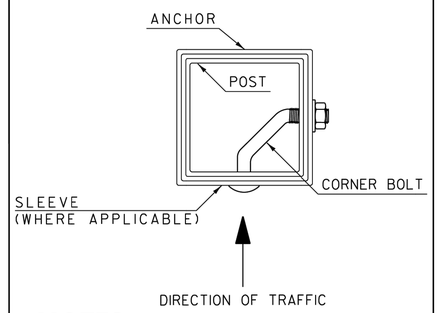

NOTES:

1. CORNER BOLTS SHALL BE 5/16 INCH DIAMETER WITH 18 THREADS PER INCH AND DIMENSIONS SHALL BE DETERMINED BASED ON THE OUTERMOST DIMENSION OF THE SLEEVE, ANCHOR OR POST. THREAD EXPOSURE MUST EXCEED THE CORRESPONDING NUT WIDTH. THE CORNER BOLT AND CORRESPONDING HARDWARE SHALL BE ZINC PLATED, MEETING OR EXCEEDING THE REQUIREMENTS OF THE "AMERICAN SOCIETY FOR TESTING AND MATERIALS" (ASTM) A307.

SLEEVE /ANCHOR INSTALLATION DETAIL

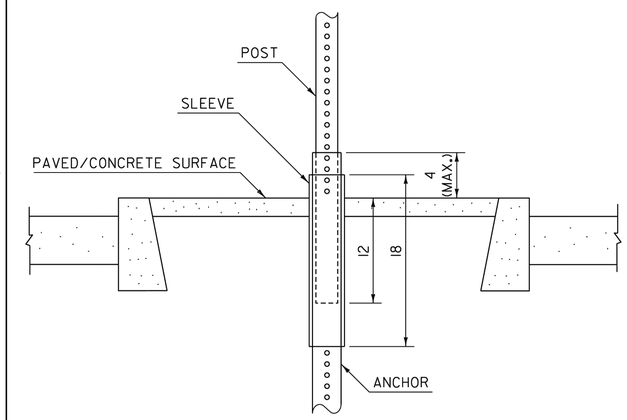

NOTES:

1. A SLEEVE SHALL BE INSTALLED FOR SIGN INSTALLATIONS IN CONCRETE OR PAVEMENT.
2. THE SLEEVE SHALL BE 18 INCHES MINIMUM IN LENGTH.
3. THREE INCH SLEEVES THAT DO NOT HAVE HOLES WILL REQUIRE THAT 7/16 INCH HOLES ARE DRILLED TO FACILITATE CONNECTIONS.
4. REFER TO CURRENT EDITION OF THE "VERMONT AGENCY OF TRANSPORTATION STANDARD SPECIFICATIONS FOR CONSTRUCTION" FOR MATERIAL REQUIREMENTS.

POST SPACING DETAILS

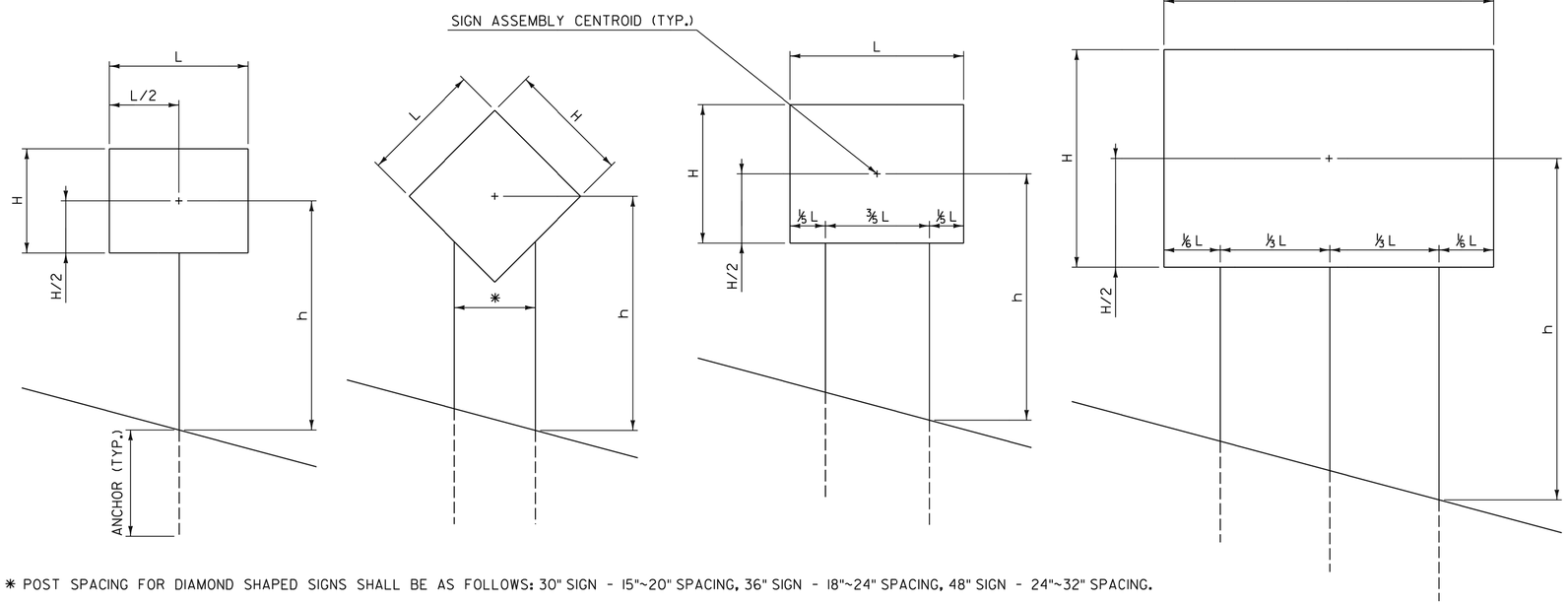

* POST SPACING FOR DIAMOND SHAPED SIGNS SHALL BE AS FOLLOWS: 30" SIGN - 15"~20" SPACING, 36" SIGN - 18"~24" SPACING, 48" SIGN - 24"~32" SPACING.

GENERAL NOTES:

1. ALL SQUARE TUBE STEEL POSTS AND ANCHORS SHALL BE FORMED INTO A SIZE AND SHAPE IN SUCH A MANNER THAT NEITHER FLASH NOR WELD SHALL INTERFERE WITH THE TELESCOPING PROPERTIES, NOR DAMAGE THE GALVANIZING.
2. ANCHORS MAY BE DRIVEN OR SET INTO A DUG HOLE AND BACKFILLED. IF DRIVEN, A DRIVING CAP SHALL BE USED. THE DUG HOLE INSTALLATION METHOD SHALL BE UTILIZED IN AREAS WITH POOR SOIL CONDITIONS OR AS DIRECTED BY THE ENGINEER. BACKFILL SHALL BE COMPACTED AS DIRECTED BY THE ENGINEER.
3. THE TOPS OF SIGN POSTS SHALL BE AT OR NEAR THE TOP OF SIGN. THE POST SHALL NOT EXTEND ABOVE THE TOP OF SIGN.
4. SIGN POSTS SHALL BE INSTALLED A MINIMUM OF ONE FOOT BELOW GROUND, INSIDE THE ANCHOR. THE LENGTH OF ANCHOR EXPOSED ABOVE GROUND SHALL NOT EXCEED FOUR INCHES.
5. ALL DIMENSIONS SHOWN IN INCHES.

BID SET
NOT FOR CONSTRUCTION 7/16/2026

DuBois & King inc.
www.dubois-king.com
© Copyright 2026 DuBois & King inc.

BID SET NOT FOR CONSTRUCTION

REVISIONS			
NUMBER	DATE	REVISION DESCRIPTION	BY

CLIENT NAME
TOWN OF WAITSFIELD

PROJECT NAME
WAITSFIELD COMMUNITY WASTEWATER SYSTEM

PROJECT ADDRESS
4144 MAIN STREET
WAITSFIELD, VERMONT 05673

SHEET TITLE
CONTRACT NO. 2
SQUARE TUBE SIGN POST AND ANCHOR

D&K PROJECT #	PROJ. ENG.
227947	JBA
DRAWN BY	CHECKED BY
EBS	DDC

DATE
JULY 2026

SHEET NUMBER
C67

I:\2\227947 Waitsfield Water and Wastewater Feasibility Stud\Drawings\Civil\227974-DT01.dwg 8/27/2026 11:33 AM

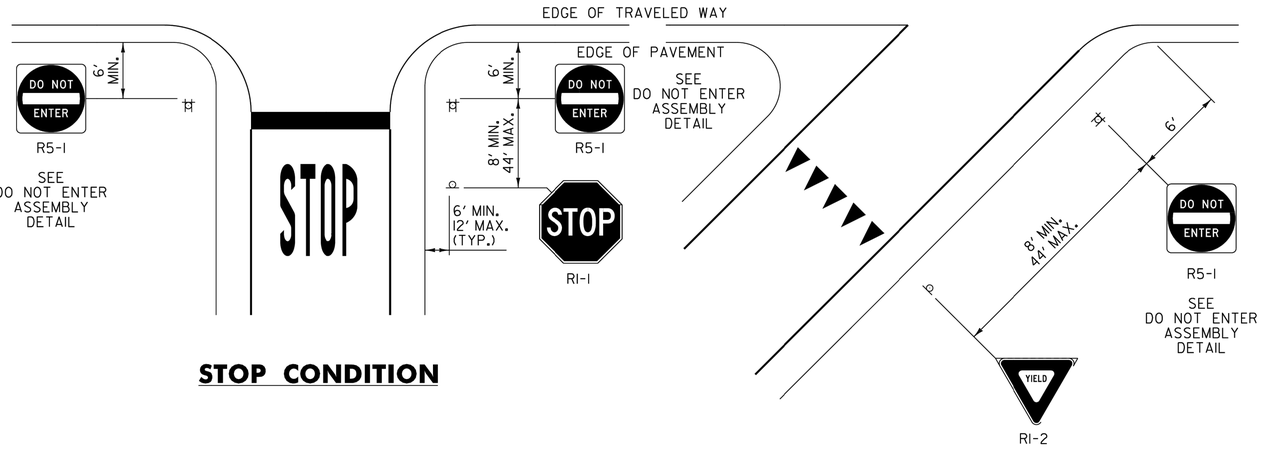

STOP CONDITION

EXIT RAMP SIGN LOCATION DETAILS

YIELD CONDITION

NOTES:

1. THE "STOP" (RI-I) SIGN SHOULD BE PLACED AS NEAR TO THE STOP BAR AS PRACTICAL. THE SIGN SHOULD BE PLACED TO MAXIMIZE VISIBILITY WITHIN THE RANGE OF OFFSETS SHOWN.
2. THE "YIELD" (RI-2) SIGN SHOULD BE PLACED AS NEAR TO THE YIELD MARKINGS AS PRACTICAL. THE SIGN SHOULD BE PLACED TO MAXIMIZE VISIBILITY WITHIN THE RANGE OF OFFSETS SHOWN.

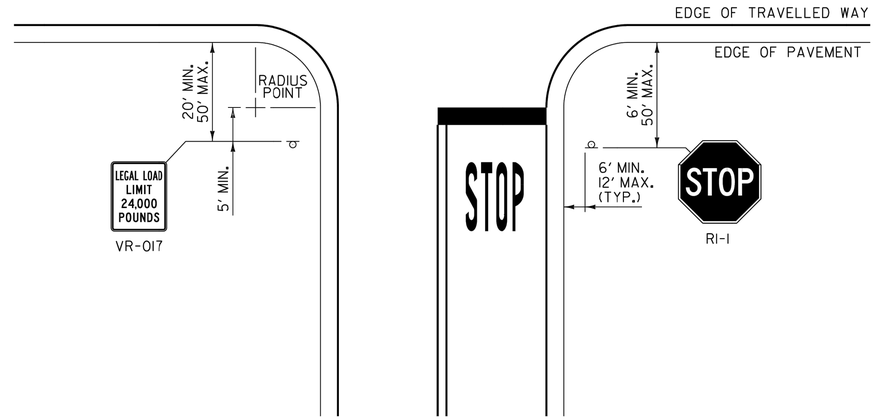

LEGAL LOAD LIMIT AND STOP SIGNS AT INTERSECTIONS WITH TOWN HIGHWAYS

NOTES:

1. THE "STOP" (RI-I) SIGN SHOULD BE PLACED AS NEAR TO THE STOP BAR AS PRACTICAL. THE SIGN SHOULD BE PLACED TO MAXIMIZE VISIBILITY WITHIN THE RANGE OF OFFSETS SHOWN.

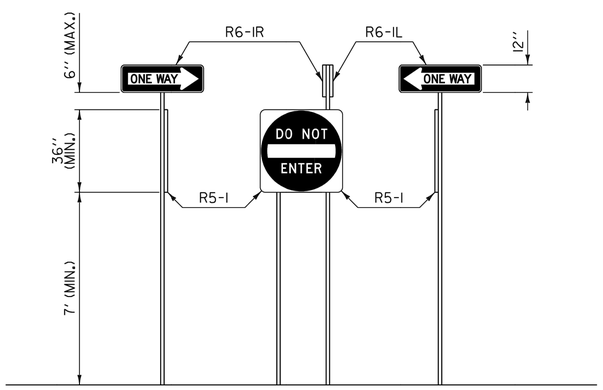

DO NOT ENTER ASSEMBLY

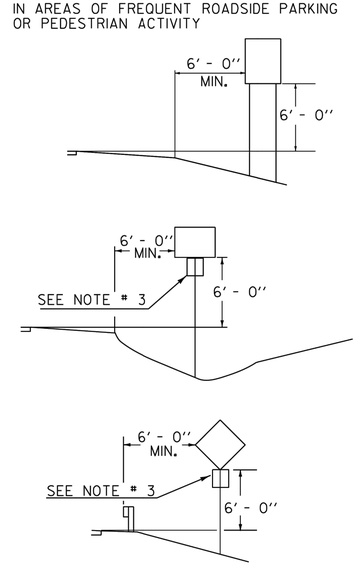

RURAL

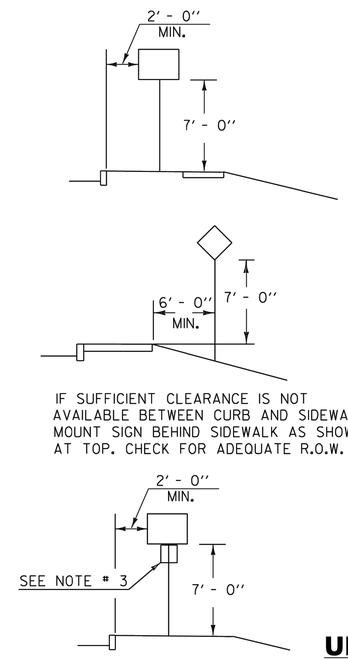

URBAN

GENERAL NOTES:

1. WHEN INSTALLED, STREET NAME SIGNS SHOULD BE INSTALLED PERPENDICULAR TO APPROACHING MAINLINE TRAFFIC AND SHALL BE POSITIONED IN SUCH A WAY AS TO ENSURE THE BEST POSSIBLE VISIBILITY TO APPROACHING MAINLINE TRAFFIC FROM EACH DIRECTION. THE STREET NAME SIGN SHOULD BE INSTALLED INDEPENDENTLY ON EITHER CORNER OF THE INTERSECTION. THE STREET NAME SIGNS SHALL BE INSTALLED A MINIMUM OF SIX FEET FROM EDGE OF PAVEMENT ON THE MAINLINE ROUTE TO THE NEAREST EDGE OF SIGN.
2. STREET NAME SIGNS WITH A LENGTH EXCEEDING 42 INCHES SHALL BE INSTALLED ON TWO POSTS. NO MORE THAN TWO POSTS SHALL OCCUPY AN EIGHT FOOT TRAVEL PATH, UNLESS PROTECTED BY BARRIER.
3. IN BOTH RURAL AND URBAN LOCATIONS, IF A SECONDARY SIGN IS MOUNTED BELOW ANOTHER SIGN, THE MINIMUM CLEARANCE MAY BE REDUCED BY ONE FOOT.
4. IN RURAL AREAS WITH NO OR MINIMAL SHOULDER, THE LATERAL CLEARANCE TO THE EDGE OF A SIGN SHOULD BE A MINIMUM OF ONE FOOT FROM THE EDGE OF THE TRAVEL WAY.
5. SEE OTHER STANDARD DRAWINGS FOR MOUNTING CLEARANCE AND SPACING OF DESTINATION AND ROUTE MARKER ASSEMBLIES AND TOWN LINE SIGNS.
6. THE "STOP" (RI-I) SIGN SHALL NOT BE MOUNTED LESS THAN FIVE FEET IN HEIGHT TO THE BOTTOM OF THE SIGN.

BID SET
NOT FOR CONSTRUCTION 7/16/2026

DuBois & King inc.
www.dubois-king.com
© Copyright 2026 DuBois & King inc.

STATE OF VERMONT
ASHLEY B. DUBOIS
LICENSED PROFESSIONAL ENGINEER
07-16-2026
BID SET NOT FOR CONSTRUCTION

REVISIONS			
NUMBER	DATE	REVISION DESCRIPTION	BY

CLIENT NAME
TOWN OF WAITSFIELD

PROJECT NAME
WAITSFIELD COMMUNITY WASTEWATER SYSTEM

PROJECT ADDRESS
4144 MAIN STREET
WAITSFIELD, VERMONT 05673

SHEET TITLE
CONTRACT NO. 2
STANDARD SIGN PLACEMENT

D&K PROJECT #	PROJ. ENG.
227947	JBA
DRAWN BY	CHECKED BY
EBS	DDC

DATE
JULY 2026

SHEET NUMBER
C68

I:\2\227947 Waitsfield Water and Wastewater Feasibility Stud\Drawings\Civil\227974-DT01.dwg 8/27/2026 11:33 AM

GENERAL

1. USE STRUCTURAL DRAWINGS IN CONJUNCTION WITH THE SPECIFICATIONS ELECTRICAL, MECHANICAL AND SITE DRAWINGS.
2. ALL WORK SHALL BE IN ACCORDANCE WITH APPLICABLE CODES, STANDARDS, AND REGULATIONS.
3. DIMENSIONS SHALL NOT BE SCALED FROM DRAWINGS.
4. DETAILS SHOWN ARE TYPICAL. SIMILAR DETAILS APPLY TO SIMILAR CONDITIONS UNLESS OTHERWISE NOTED.
5. CONTRACTOR SHALL VERIFY ALL EXISTING CONDITIONS AND DIMENSIONS AND REPORT DISCREPANCIES TO ENGINEER BEFORE PROCEEDING WITH THE WORK.
6. IN CASE OF DISCREPANCIES BETWEEN THE DRAWINGS AND THE SPECIFICATIONS, THE DRAWINGS GOVERN.

SHOP DRAWINGS AND PRODUCT DATA

1. SHOP DRAWINGS: SUBMIT ELECTRONICALLY TO THE ENGINEER FOR REVIEW. SHOP DRAWINGS WILL BE PROCESSED AND RETURNED ELECTRONICALLY.
2. PRODUCT DATA: SUBMIT ELECTRONICALLY TO THE ENGINEER, MARKING TO INDICATE ACTUAL PRODUCT TO BE PROVIDED. PRODUCT DATA WILL BE PROCESSED AND RETURNED ELECTRONICALLY.

EARTHWORK

1. SUBMITTALS: SUBMIT TEST REPORTS ON BORROW MATERIAL, VERIFICATION OF FOOTING SUBGRADE MATERIAL, IN-PLACE SOIL DENSITY TEST AND OPTIMUM MOISTURE-MAXIMUM DENSITY CURVES.
2. EXISTING UTILITIES: LOCATE BY HAND EXCAVATION AND PROVIDE PROTECTION FROM DAMAGE. COOPERATE WITH OWNER AND UTILITY COMPANIES FOR MAINTAINING SERVICES.
3. PROTECTIONS: PROTECT STRUCTURES, UTILITIES, SIDEWALKS, PAVEMENTS, AND OTHER FACILITIES IN AREAS OF WORK. BARRICADE OPEN EXCAVATIONS AND PROVIDE WARNING LIGHTS. SLOPE SIDES OF EXCAVATIONS AS REQUIRED FOR SAFE WORKING CONDITIONS. COMPLY WITH REGULATIONS OF AUTHORITIES HAVING JURISDICTION INCLUDING OSHA REGULATIONS FOR ALL EXCAVATION AND BACKFILLING WORK.
4. CRUSHED STONE: WASHED, HARD, DURABLE ROCK MEETING THE REQUIREMENTS CALLED OUT FOR ITEM 704.02B 3/4 INCH STONE IN THE LATEST SECTION OF THE VERMONT AGENCY OF TRANSPORTATION (VTRANS) STANDARD SPECIFICATION FOR CONSTRUCTION.
5. EXCAVATION: REMOVE AND DISPOSE OF MATERIAL ENCOUNTERED TO OBTAIN REQUIRED SUBGRADE ELEVATIONS. USE SMOOTH-EDGE BUCKET FOR FINAL CUTS.
6. DEWATERING: PREVENT SURFACE WATER AND GROUND WATER FROM ENTERING EXCAVATIONS, FROM PONDING ON PREPARED SUBGRADES AND FROM FLOODING PROJECT SITE AND SURROUNDING AREA. PROTECT SUBGRADES FROM SOFTENING, UNDERMINING, WASHOUT AND DAMAGE BY RAIN OR WATER ACCUMULATION. IF GROUNDWATER IS ENCOUNTERED WITHIN THE EXCAVATION ZONE OF FOOTINGS, ALL EXPOSED FOUNDATION BEARING MATERIALS WITHIN THE EXCAVATED GROUNDWATER ZONE SHALL BE OVER-EXCAVATED BY TWO (2) FEET AND RETURNED TO THE PLANNED ELEVATION THROUGH PLACEMENT OF CRUSHED STONE WRAPPED IN A NON-WOVEN GEOTEXTILE FABRIC.
7. BACKFILL AND FILL: PLACE SATISFACTORY BACKFILL AND FILL SOIL MATERIALS IN LAYERS NOT MORE THAN 6 INCHES IN LOOSE DEPTH, COMPACTING EACH LAYER TO REQUIRED MAXIMUM DENSITY. DO NOT PLACE MATERIALS ON SURFACES THAT ARE MUDDY, FROZEN, OR CONTAIN ICE OR FROST.
8. COMPACTION: COMPACT EACH LAYER OF BACKFILL AND FILL SOIL MATERIALS TO 95 PERCENT MAXIMUM DENSITY AS DETERMINED BY ASTM D 1557. CRUSHED STONE SHOULD BE COMPACTED WITH MINIMUM 3 TO 5 PASSES OF A VIBRATORY PLATE COMPACTOR HAVING A STATIC WEIGHT OF AT LEAST 500 POUNDS. NATIVE SOILS AT THE FOUNDATION EXCAVATION DEPTHS SHALL BE PROOF ROLLED/COMPACTED IN PLACE TO 95 PERCENT MAXIMUM DENSITY AS DETERMINED BY ASTM D 1557. SUBGRADE TO BE INSPECTED BY QUALIFIED GEOTECHNICAL ENGINEER PRIOR TO BACKFILLING. IF GEOTECHNICAL ENGINEER DETERMINES EXISTING SUBGRADE IS UNSUITABLE, SITE MAY REQUIRE OVER-EXCAVATION AS DIRECTED BY GEOTECHNICAL ENGINEER TO BE BACKFILLED WITH COMPACTED CRUSHED STONE.
9. TESTING: OWNER WILL ENGAGE SOILS TESTING AND INSPECTION SERVICE FOR QUALITY CONTROL TESTING DURING EARTHWORK OPERATIONS. TYPE AND QUANTITY OF TESTS SHALL BE AS DIRECTED BY THE GEOTECHNICAL ENGINEER.
10. SEPARATION GEOTEXTILE: NON-WOVEN GEOTEXTILE FABRIC, MANUFACTURED FOR SEPARATION APPLICATIONS, COMPLYING WITH VTRANS SPECIFICATION ITEM 649.31 GEOTEXTILE UNDER STONE FILL.
11. FOOTINGS: PLACE FOOTINGS ON 12 INCHES MINIMUM OF COMPACTED CRUSHED STONE PLACED OVER SUBGRADE CAPABLE OF SUPPORTING AN ALLOWABLE BEARING PRESSURE OF 1,500 POUNDS PER SQUARE FOOT. SEPARATE CRUSHED STONE FROM OTHER SOIL TYPES WITH NON-WOVEN SEPARATION GEOTEXTILE.
12. FOUNDATION DESIGN BASED ON RECOMMENDATIONS CONTAINED IN GEOTECHNICAL REPORT PREPARED BY DUBOIS & KING, INC. DATED FEBRUARY 28, 2025. SUBGRADE TO BE INSPECTED BY QUALIFIED GEOTECHNICAL ENGINEER PRIOR TO FOOTING INSTALLATION. EARTHWORK CONTRACTOR SHALL REVIEW AND FOLLOW RECOMMENDATIONS MADE IN GEOTECHNICAL REPORT INCLUDING BUT NOT LIMITED TO THOSE REGARDING SITE AND SUBGRADE PREPARATION, EXCAVATION, BLASTING, DEWATERING, AND WEATHER CONSIDERATIONS.

CONCRETE

1. ALL CONCRETE SHALL CONFORM TO REQUIREMENTS AND RECOMMENDATIONS OF ACI 318 "BUILDING CODE REQUIREMENTS OF REINFORCED CONCRETE", ACI 350 " CODE REQUIREMENTS FOR ENVIRONMENTAL ENGINEERING CONCRETE STRUCTURES" AND ACI FIELD REFERENCE MANUAL MNL-15.
2. CONCRETE WORK SHALL CONFORM TO ALL REQUIREMENTS OF ACI 301," SPECIFICATIONS FOR STRUCTURAL CONCRETE FOR BUILDINGS," EXCEPT AS MODIFIED OR SUPPLEMENTED BELOW.
3. SHOP DRAWINGS AND DATA: SUBMIT SHOP DRAWINGS COMPLYING WITH ACI MNL-66 "ACI DETAILING MANUAL" AND PRODUCT DATA FOR ACCESSORIES, ADMIXTURES AND CURING COMPOUNDS.
4. CONCRETE COMPRESSIVE DESIGN STRENGTHS AND MIX PROPORTIONS SHALL BE AS OUTLINED BELOW. MIX PROPORTIONS AND DESIGNS SHALL BE SUBMITTED FOR APPROVAL. LIMIT MAXIMUM WATER-SOLUBLE CHLORIDE ION CONTENT IN CONCRETE BY WEIGHT OF CEMENT FOR CAST-IN-PLACE CONCRETE TO 0.3 FOR INTERIOR CONCRETE AND 0.15 FOR EXTERIOR CONCRETE.

CONCRETE USAGE	CONCRETE CLASS	COMPRESSIVE STRENGTH	MAX W/CM RATIO	AIR
FOOTINGS, SLABS AND WALLS	F2, S0, W0, C1	5,000 PSI AT 28 DAYS	0.45	6% +/- 1.5%

5. STEEL REINFORCEMENT INSTALLATION (INCLUDING WELDED WIRE REINFORCEMENT): COMPLY WITH CRSI "MANUAL OF STANDARD PRACTICE" FOR FABRICATING, PLACING, AND SUPPORTING REINFORCEMENT. CLEAN REINFORCEMENT OF LOOSE RUST AND MILL SCALE, EARTH, ICE, AND OTHER FOREIGN MATERIALS THAT REDUCE BOND TO CONCRETE. ACCURATELY POSITION, SUPPORT, AND SECURE REINFORCEMENT AGAINST DISPLACEMENT BEFORE AND DURING CONCRETE PLACEMENT OPERATIONS.
6. REINFORCING STEEL: ASTM A 615 GRADE 60.
7. JOINT SEALANT: SIKAFLEX 1A AS MANUFACTURED BY SIKA CORPORATION OR APPROVED EQUAL..
8. PVC WATERSTOP SHALL BE INSTALLED AT ALL WATER-RETAINING CONSTRUCTION AND EXPANSION JOINT. WATERSTOP SHALL BE CONTINUOUS THROUGHOUT THE JOINT AND SHALL BE INSTALLED IN ACCORDANCE WITH THE MANUFACTURER'S INSTRUCTIONS.
9. ALL CONCRETE SHALL BE READY-MIX CONCRETE CONFORMING TO ASTM C 94 EXCEPT THAT ADDITION OF WATER WILL NOT BE PERMITTED.
10. ALL REINFORCING MARKED CONTINUOUS (CONT.) SHALL BE LAPPED 64 BAR DIAM. AT SPLICES AND CORNERS AND SHALL BE HOOKED OR EXTENDED 48 BAR DIAM. AT NON-CONTINUOUS ENDS.
11. REINFORCEMENT SHALL BE SECURELY TIED IN ITS PROPER PLACE BEFORE AND DURING CONCRETE PLACEMENT OPERATIONS USING APPROVED CHAIRS AND SPACERS AS REQUIRED.
12. THE CONCRETE CONTRACTOR SHALL INSTALL OR GIVE OTHER TRADES AMPLE OPPORTUNITY TO INSTALL ALL ANCHORS, BOLTS, PLATES, NAILERS, SLOTS, CHASES, PIPE SLEEVES, ETC., AS REQUIRED BY THESE TRADES. THE CONTRACTOR SHALL VERIFY ALL DIMENSIONS BEFORE SETTING SCREEDS AND FORMS.
13. PROVIDE CLEARANCES FROM FACES OF CONCRETE TO REINFORCEMENT AS FOLLOWS (UNLESS NOTED OTHERWISE):

    CONCRETE CAST AGAINST EARTH: 3" (ALL BARS)
    CONCRETE EXPOSED TO EARTH, LIQUID, WEATHER, OR BEARING ON WORK MAT OR SLABS SUPPORTING EARTH COVER:
    SLABS, WALLS AND FOOTINGS: 2"
14. ALL CONCRETE SHALL BE CONSOLIDATED USING MECHANICAL VIBRATING EQUIPMENT.
15. FORMED CONCRETE NOT EXPOSED TO VIEW SHALL RECEIVE A ROUGH FORM FINISH; FORMED CONCRETE EXPOSED TO VIEW SHALL RECEIVE A SMOOTH FORM FINISH.
16. CONCRETE SLABS SHALL BE WET CURED, USE OF MEMBRANE-FORMING CURING COMPOUND IS PROHIBITED.
17. CONCRETE SURFACES IN CONTACT WITH STORED WATER SHALL RECEIVE A TROWEL FINISH TO PRODUCE A DENSE, SMOOTH AND UNIFORM SURFACE. EXPOSED SURFACE NOT IN CONTACT WITH STORED WATER SHALL RECEIVE A BROOM FINISH.
18. TESTING: THE OWNER WILL EMPLOY A TESTING LABORATORY TO PERFORM TESTS FOR QUALITY CONTROL DURING PLACEMENT AS DIRECTED BY THE ENGINEER.
19. COMPRESSION TEST: ACI 318, PREPARE 4 CYLINDERS PER TEST SET FOR EACH COMPOSITE SAMPLE. (3) CYLINDERS SHALL BE TESTED AT 28 DAYS
    1. AT LEAST ONCE A DAY.
    2. AT LEAST ONCE FOR EACH 150 CUBIC YARDS OF CONCRETE
    3. AT LEAST ONCE FOR EACH 5,000 SQUARE FEET OF SURFACE AREA FOR SLABS OR WALLS.

DESIGN CRITERIA

1. CODES: IBC 2021 AND ASCE 7-16, AS AMENDED BY 2025 VERMONT FIRE AND BUILDING SAFETY CODE
2. STRUCTURE RISK CATEGORY: III
3. ROOF SLAB LOADS :
   - PEDESTRIAN LIVE LOAD: 100 PSF
   - DEAD LOAD (SOIL ABOVE SLAB) 120 PCF
   - GROUND SNOW LOAD (Pg): 70 PSF
4. LATERAL EARTH PRESSURE:
   - UNIT WEIGHT OF SOIL 120 PCF
   - GROUND WATER LEVEL: 5'-0" BELOW FINISH GRADE
5. SEISMIC LOAD:

SEISMIC DESIGN MEETS THE REQUIREMENTS FOR SEISMIC SAFETY PER USDA 7 CFR 1792.

IMPORTANCE FACTOR (Ie):	1.25
MAPPED SPECTRAL RESPONSE COEFFICIENTS:	Ss = 0.259 AND S1 = 0.075
SITE CLASS:	E
SPECTRAL RESPONSE COEFFICIENTS:	Sds = 0.410 AND Sd1 = 0.210
SEISMIC DESIGN CATEGORY:	D

BID SET 08-17-2026

DuBois & King inc

www.dubois-king.com

© Copyright 2026 Dubois & King Inc.

BID SET

REVISIONS

NUMBER	DATE	REVISION DESCRIPTION	BY

CLIENT NAME
TOWN OF WAITSFIELD

PROJECT NAME
WAITSFIELD COMMUNITY WASTEWATER SYSTEM

PROJECT ADDRESS
4144 MAIN STREET
WAITSFIELD, VT 05673

SHEET TITLE
CONTRACT NO. 2
NOTES

D&K PROJECT #	PROJ. ENG.
227947	KO
DRAWN BY KO	CHECKED BY JS

DATE
August 17, 2026

SHEET NUMBER
S0.1

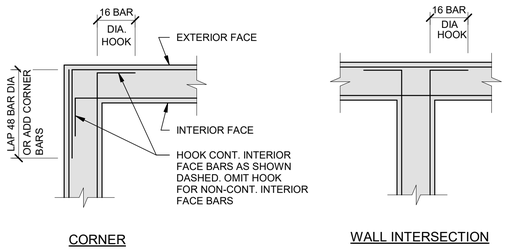

1 S0.2 TYPICAL REINFORCING AT CONCRETE WALL CORNERS

NOT TO SCALE

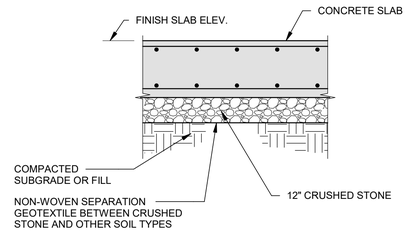

2 S0.2 TYPICAL SLAB/SUBGRADE PROFILE

NOT TO SCALE

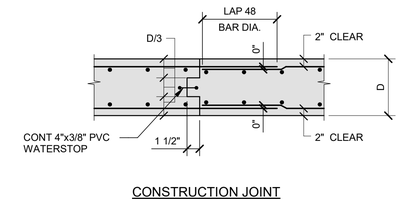

3 S0.2 TYPICAL SLAB JOINT DETAILS

NOT TO SCALE

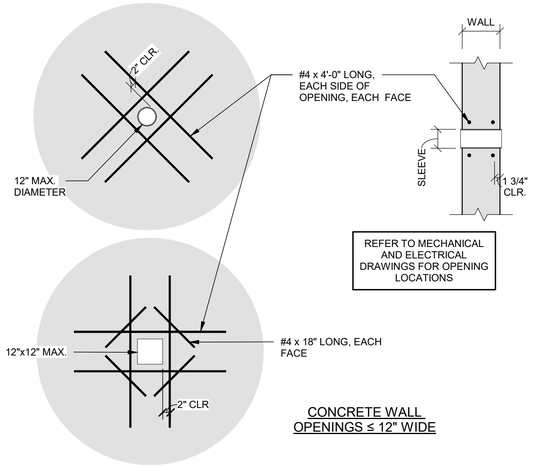

4 S0.2 TYPICAL REINFORCING AT WALL OPENINGS

NOT TO SCALE

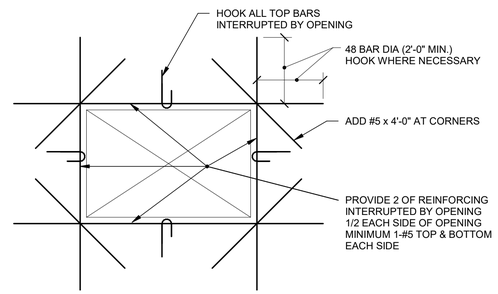

5 S0.2 TYPICAL REINFORCING AT SLAB OPENINGS

NOT TO SCALE

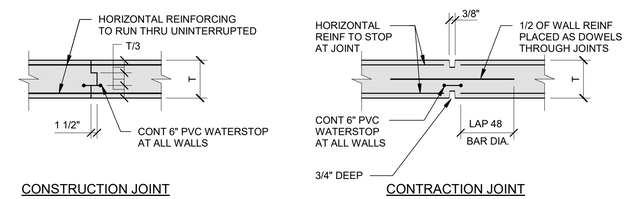

6 S0.2 TYPICAL WALL JOINT DETAILS

NOT TO SCALE

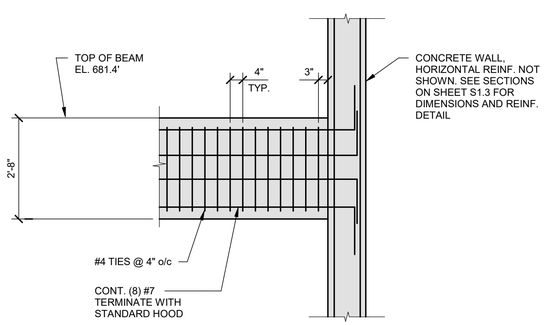

7 S0.2 CONCRETE BEAM TO WALL CONNECTION DETAIL

1/2" = 1'-0"

BID SET 08-17-2026

DuBois & King inc

www.dubois-king.com

© Copyright 2026 Dubois & King Inc.

BID SET

REVISIONS		
NUMBER	DATE	REVISION DESCRIPTION	BY

CLIENT NAME

TOWN OF WAITSFIELD

PROJECT NAME

WAITSFIELD COMMUNITY WASTEWATER SYSTEM

PROJECT ADDRESS

4144 MAIN STREET
WAITSFIELD, VT 05673

SHEET TITLE

CONTRACT NO. 2

TYPICAL DETAILS

D&K PROJECT #	PROJ. ENG.
227947	KO
DRAWN BY	CHECKED BY
KO	JS

DATE

August 17, 2026

SHEET NUMBER

S0.2

SHEET 75 OF 86

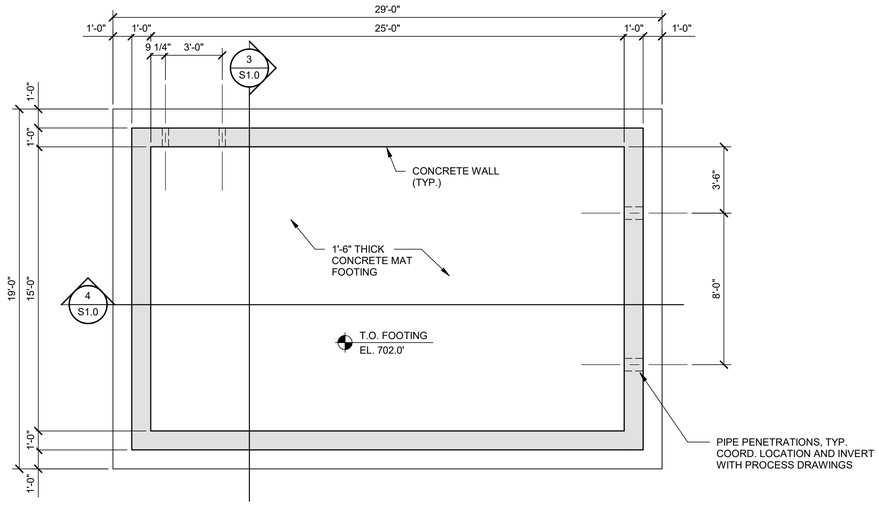

1 S1.0 FIDDLER GREEN PS FOUNDATION PLAN

1/4" = 1'-0"

1. REFER TO CIVIL DRAWINGS TO VERIFY ALL ELEVATIONS SHOWN ON PLANS AND SECTIONS.

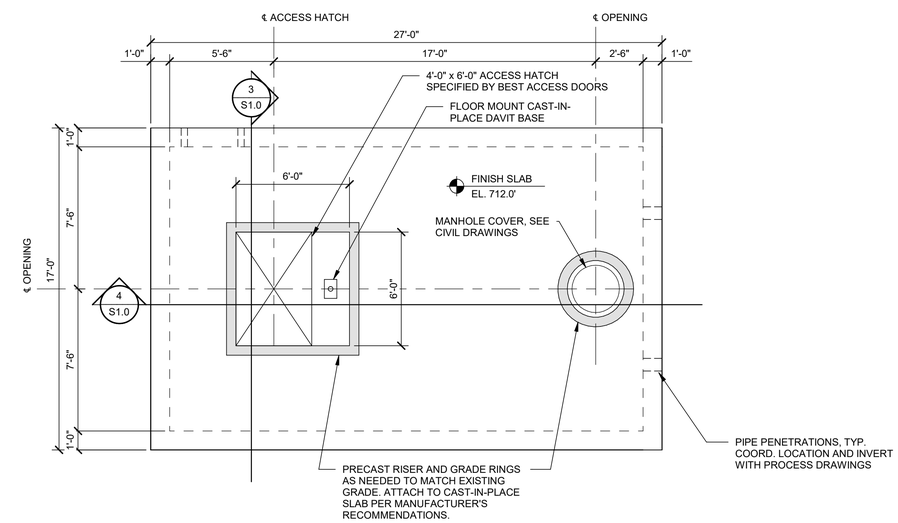

2 S1.0 FIDDLER GREEN PS ROOF SLAB PLAN

1/4" = 1'-0"

1. REFER TO CIVIL DRAWINGS TO VERIFY ALL ELEVATIONS SHOWN ON PLANS AND SECTIONS.
2. REFER TO CIVIL DRAWINGS TO COORDINATE ALL OPENINGS AND INVERTS.

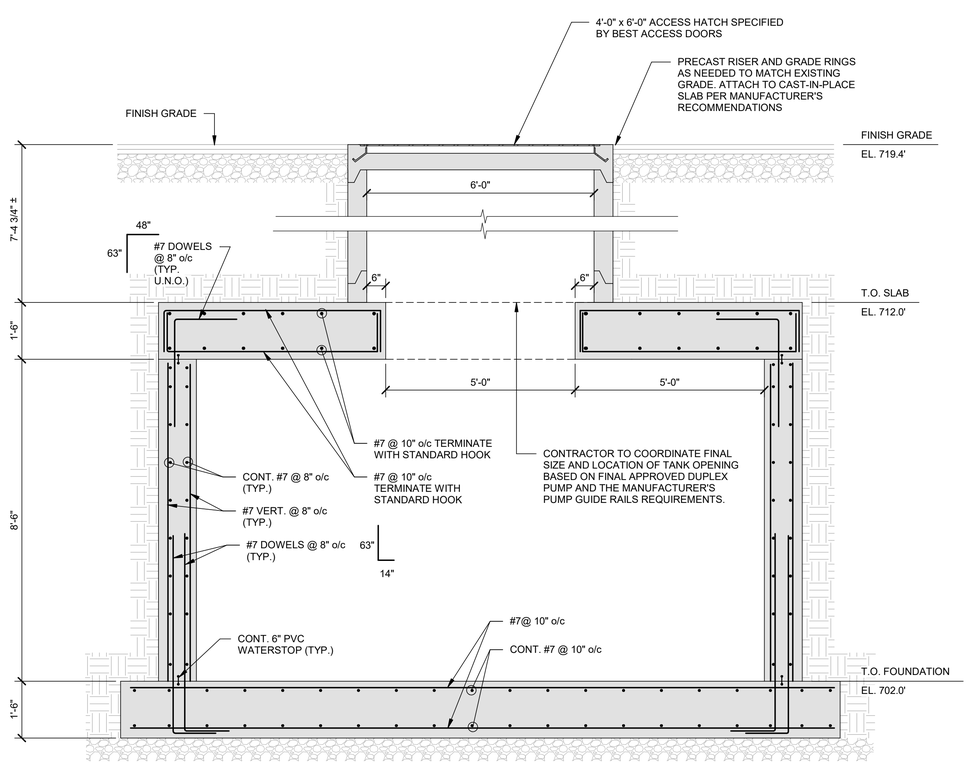

3 S1.0 SECTION

1/2" = 1'-0"

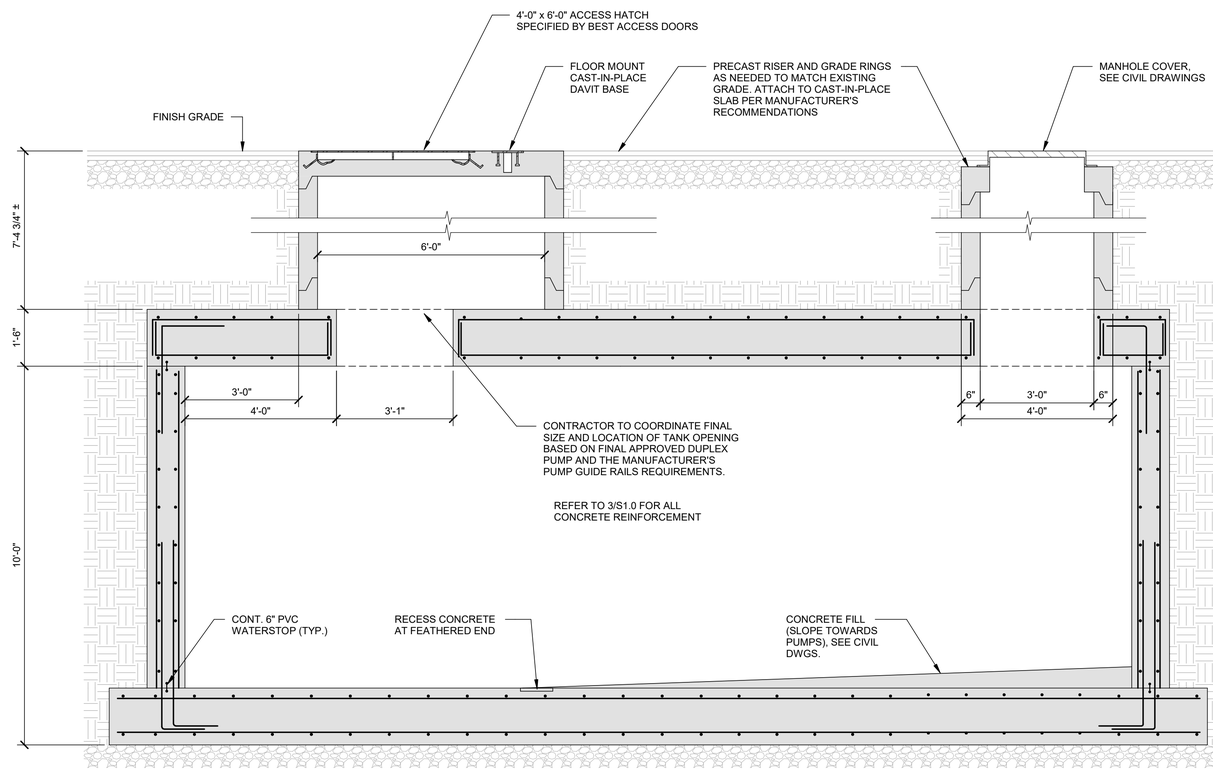

4 S1.0 SECTION

1/2" = 1'-0"

BID SET	08-17-2026

DuBois & King inc

www.dubois-king.com

© Copyright 2026 Dubois & King Inc.

BID SET

REVISIONS

NUMBER	DATE	REVISION DESCRIPTION	BY

CLIENT NAME

TOWN OF WAITSFIELD

PROJECT NAME

WAITSFIELD COMMUNITY WASTEWATER SYSTEM

PROJECT ADDRESS

4144 MAIN STREET
WAITSFIELD, VT 05673

SHEET TITLE

CONTRACT NO. 2

FIDDLER GREEN PUMP STATION PLAN AND DETAILS

D&K PROJECT #	PROJ. ENG.
227947	KO
DRAWN BY	CHECKED BY
KO	JS

DATE

August 17, 2026

SHEET NUMBER

S1.0

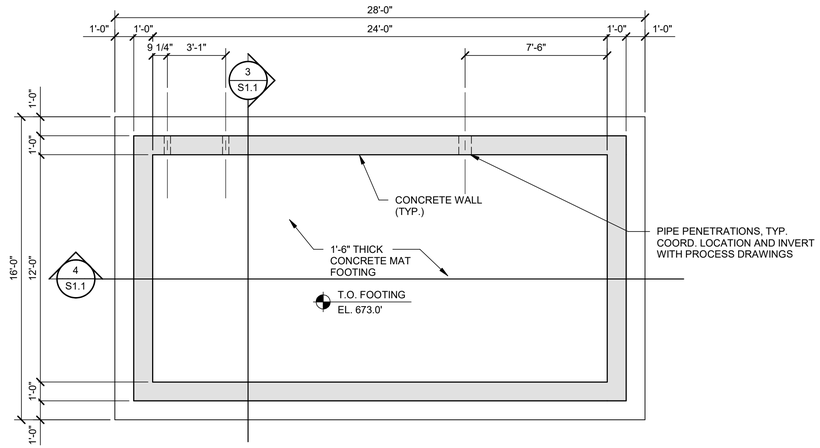

1 S1.1 SCHOOL STREET PS FOUNDATION PLAN

1/4" = 1'-0"

1. REFER TO CIVIL DRAWINGS TO VERIFY ALL ELEVATIONS SHOWN ON PLANS AND SECTIONS.

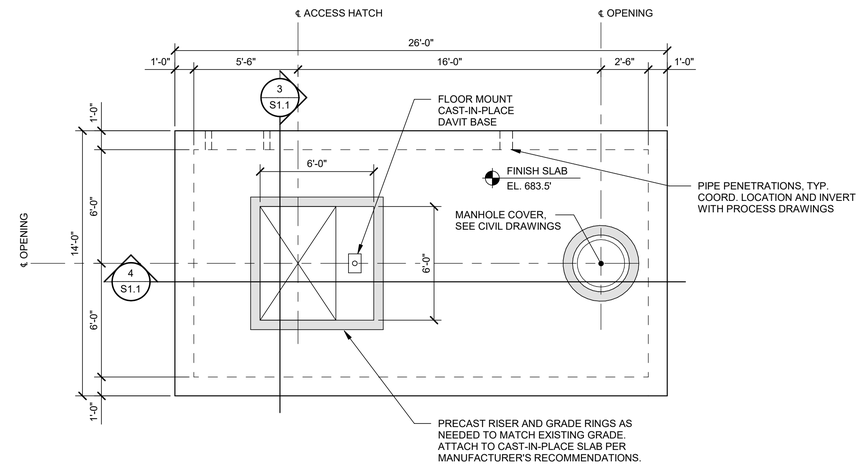

2 S1.1 SCHOOL STREET PS ROOF SLAB PLAN

1/4" = 1'-0"

1. REFER TO CIVIL DRAWINGS TO VERIFY ALL ELEVATIONS SHOWN ON PLANS AND SECTIONS.
2. REFER TO CIVIL DRAWINGS TO COORDINATE ALL OPENINGS AND INVERTS.

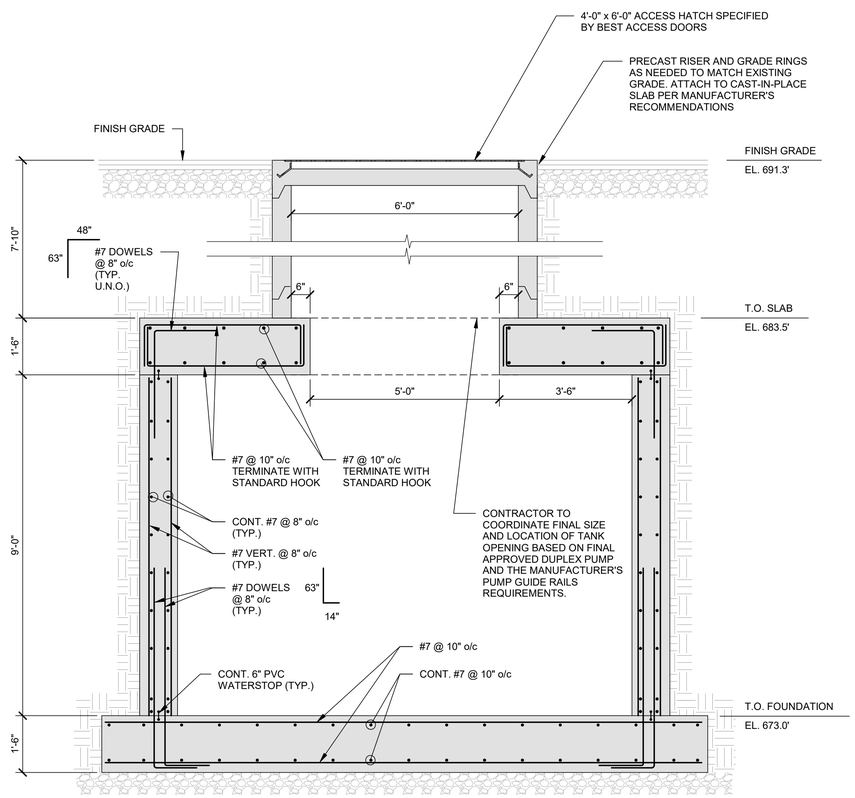

3 S1.1 SECTION

1/2" = 1'-0"

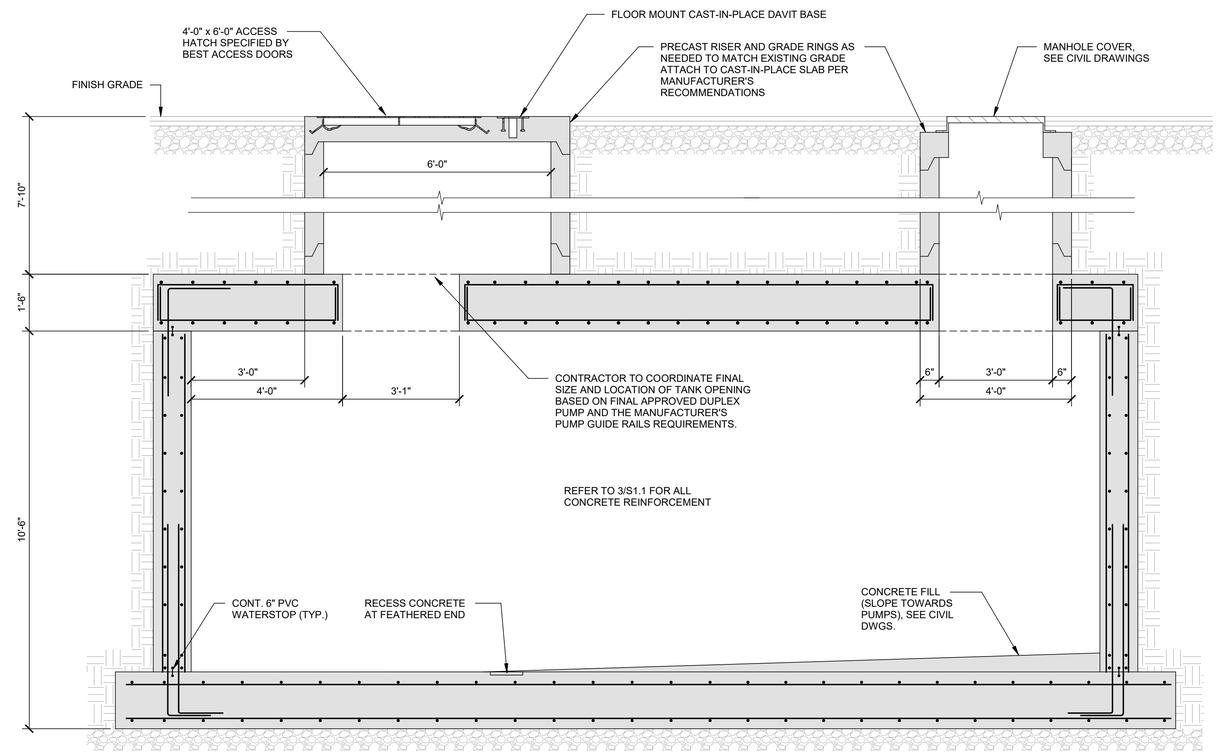

4 S1.1 SECTION

1/2" = 1'-0"

BID SET	08-17-2026

DuBois & King inc

www.dubois-king.com

© Copyright 2026 Dubois & King Inc.

BID SET

REVISIONS			
NUMBER	DATE	REVISION DESCRIPTION	BY

CLIENT NAME

TOWN OF WAITSFIELD

PROJECT NAME

WAITSFIELD COMMUNITY WASTEWATER SYSTEM

PROJECT ADDRESS

4144 MAIN STREET
WAITSFIELD, VT 05673

SHEET TITLE

CONTRACT NO. 2

SCHOOL PUMP STATION PLAN AND DETAILS

D&K PROJECT #	PROJ. ENG.
227947	KO
DRAWN BY	CHECKED BY
KO	JS

DATE

August 17, 2026

SHEET NUMBER

S1.1

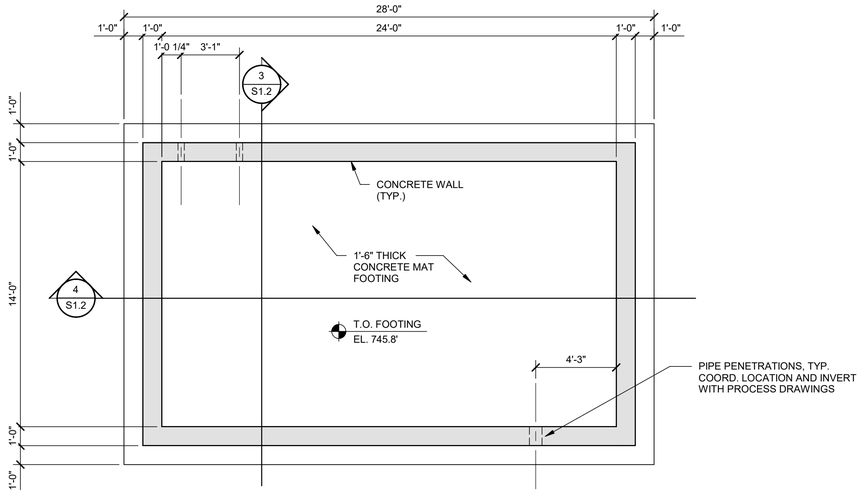

1 S1.2 UPPER IRASVILLE PS FOUNDATION PLAN

1/4" = 1'-0"

1. REFER TO CIVIL DRAWINGS TO VERIFY ALL ELEVATIONS SHOWN ON PLANS AND SECTIONS.

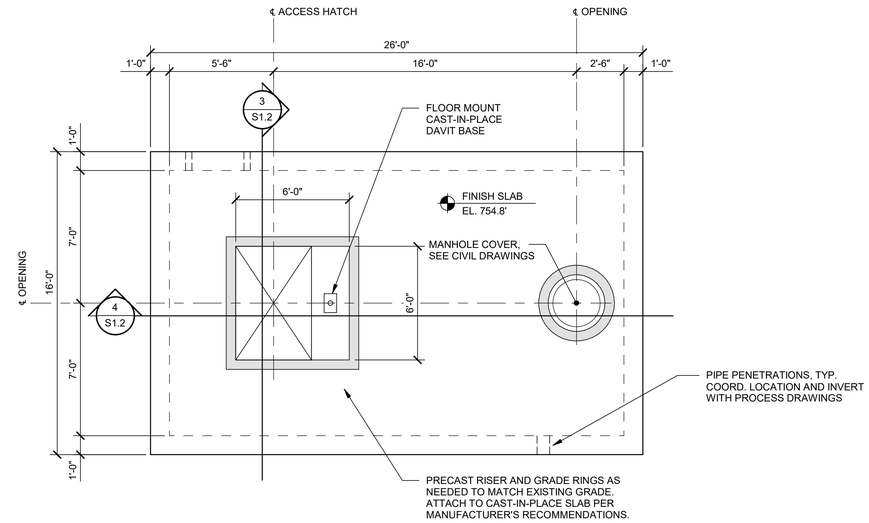

2 S1.2 UPPER IRASVILLE PS ROOF SLAB PLAN

1/4" = 1'-0"

1. REFER TO CIVIL DRAWINGS TO VERIFY ALL ELEVATIONS SHOWN ON PLANS AND SECTIONS.
2. REFER TO CIVIL DRAWINGS TO COORDINATE ALL OPENINGS AND INVERTS.

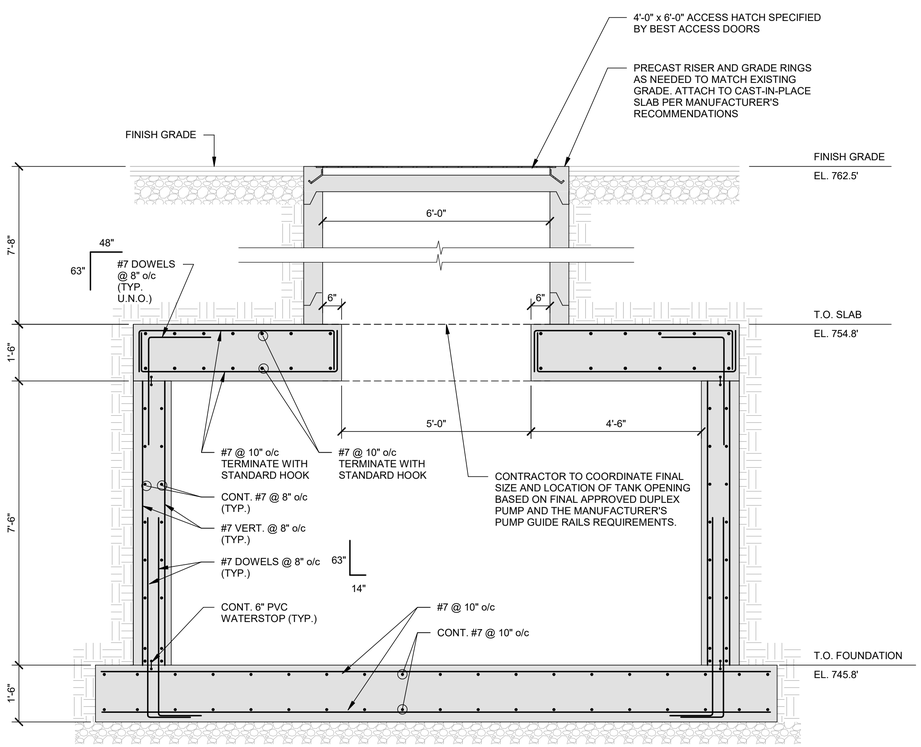

3 S1.2 SECTION

1/2" = 1'-0"

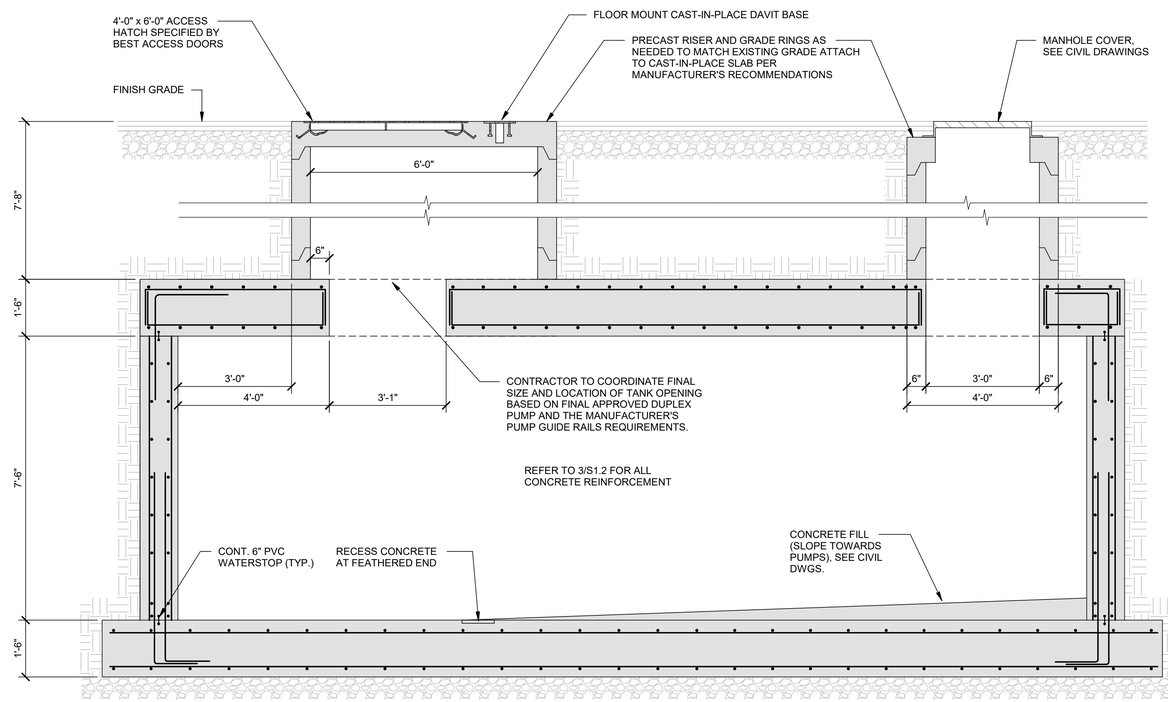

4 S1.2 SECTION

1/2" = 1'-0"

BID SET	08-17-2026

DuBois & King inc

www.dubois-king.com

© Copyright 2026 Dubois & King Inc.

BID SET

REVISIONS

NUMBER	DATE	REVISION DESCRIPTION	BY

CLIENT NAME

TOWN OF WAITSFIELD

PROJECT NAME

WAITSFIELD COMMUNITY WASTEWATER SYSTEM

PROJECT ADDRESS

4144 MAIN STREET
WAITSFIELD, VT 05673

SHEET TITLE

CONTRACT NO. 2

UPPER IRASVILLE PUMP STATION PLAN AND DETAILS

D&K PROJECT #	PROJ. ENG.
227947	KO
DRAWN BY	CHECKED BY
KO	JS

DATE

August 17, 2026

SHEET NUMBER

S1.2

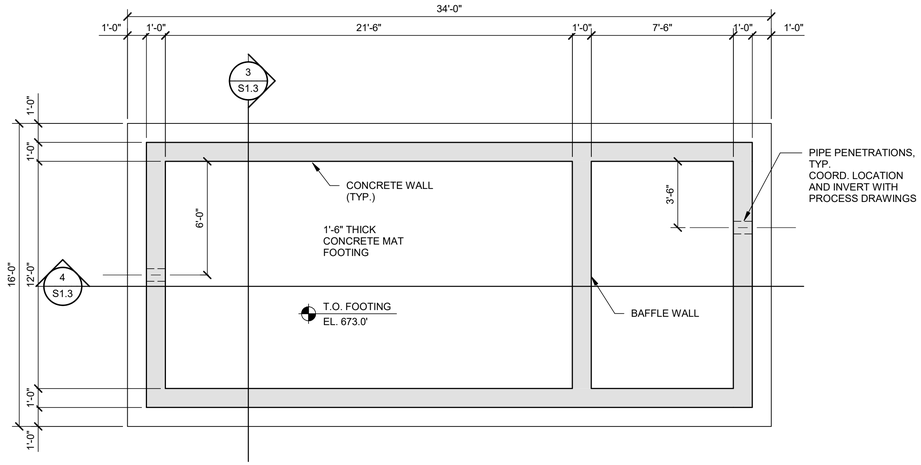

1 / S1.3 SCHOOL STREET SEPTIC TANK FOUNDATION PLAN

1/4" = 1'-0"

1. REFER TO CIVIL DRAWINGS TO VERIFY ALL ELEVATIONS SHOWN ON PLANS AND SECTIONS.

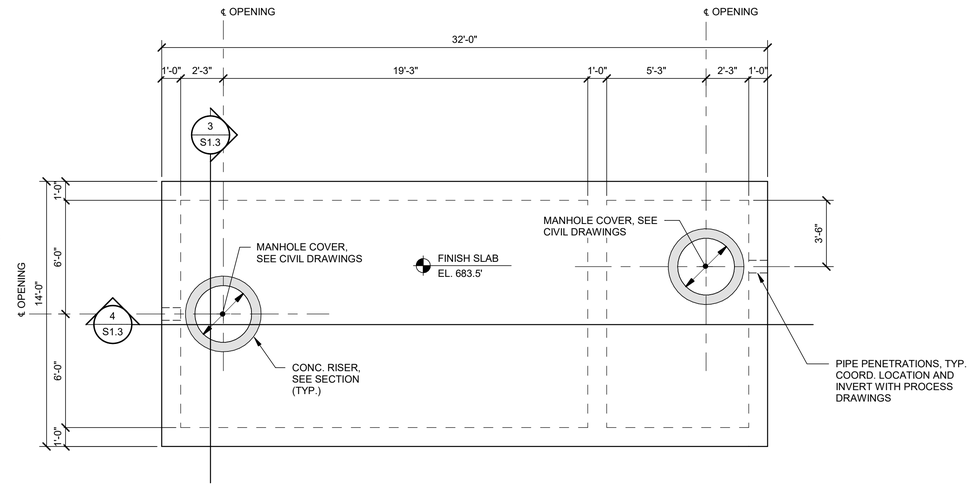

2 / S1.3 SCHOOL STREET SEPTIC TANK ROOF SLAB PLAN

1/4" = 1'-0"

1. REFER TO CIVIL DRAWINGS TO VERIFY ALL ELEVATIONS SHOWN ON PLANS AND SECTIONS.
2. REFER TO CIVIL DRAWINGS TO COORDINATE ALL OPENINGS AND INVERTS.

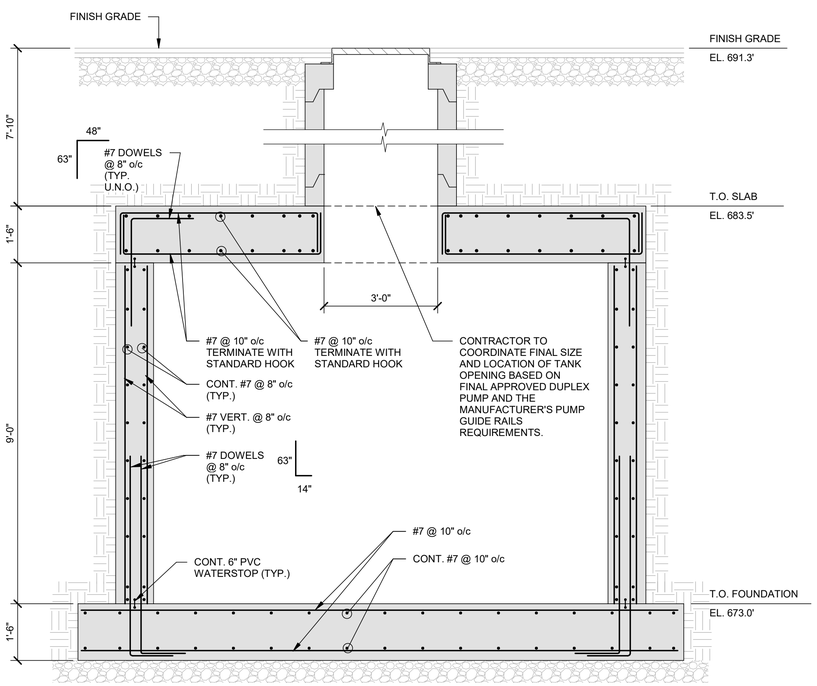

3 / S1.3 SECTION

1/2" = 1'-0"

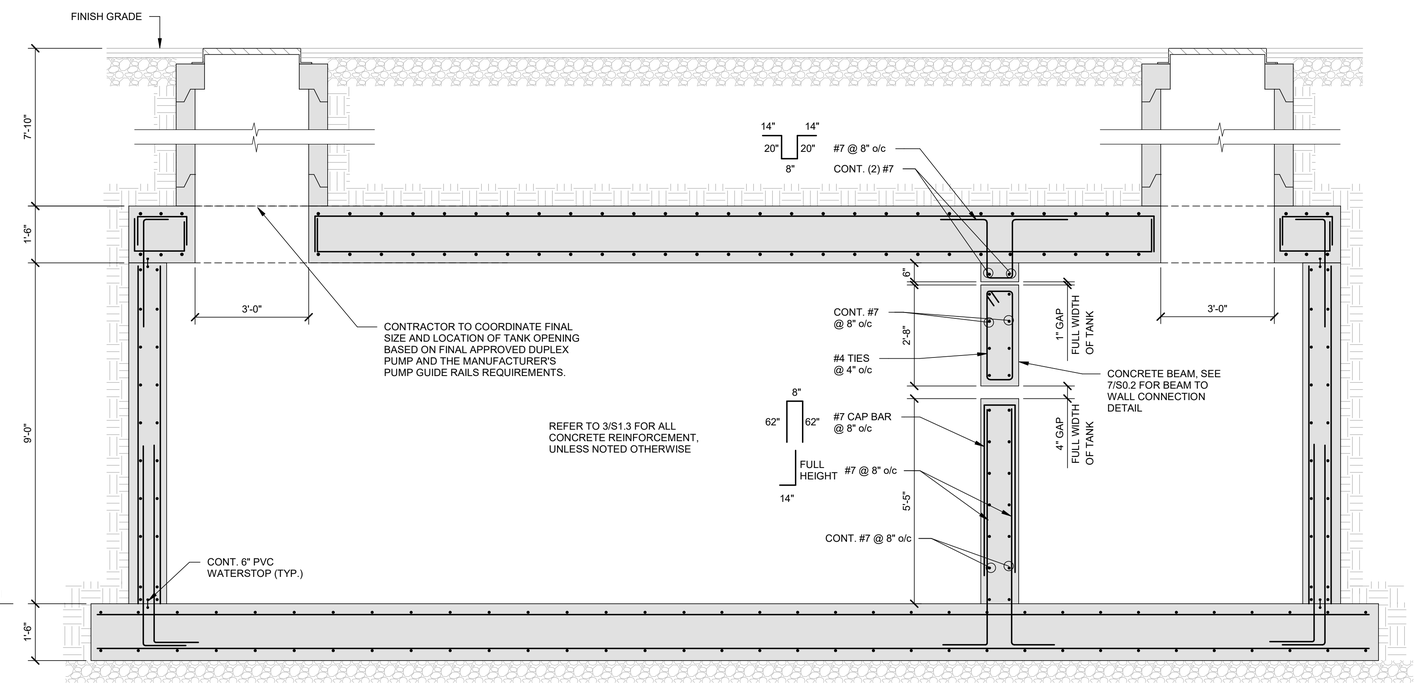

4 / S1.3 SECTION

1/2" = 1'-0"

BID SET 08-17-2026

DuBois & King inc

www.dubois-king.com

© Copyright 2026 Dubois & King Inc.

BID SET

REVISIONS			
NUMBER	DATE	REVISION DESCRIPTION	BY

CLIENT NAME
TOWN OF WAITSFIELD

PROJECT NAME
WAITSFIELD COMMUNITY WASTEWATER SYSTEM

PROJECT ADDRESS
4144 MAIN STREET
WAITSFIELD, VT 05673

SHEET TITLE
CONTRACT NO. 2
SCHOOL SEPTIC TANK PLAN AND DETAILS

D&K PROJECT #	PROJ. ENG.
227947	KO
DRAWN BY	CHECKED BY
KO	JS

DATE
August 17, 2026

SHEET NUMBER
S1.3

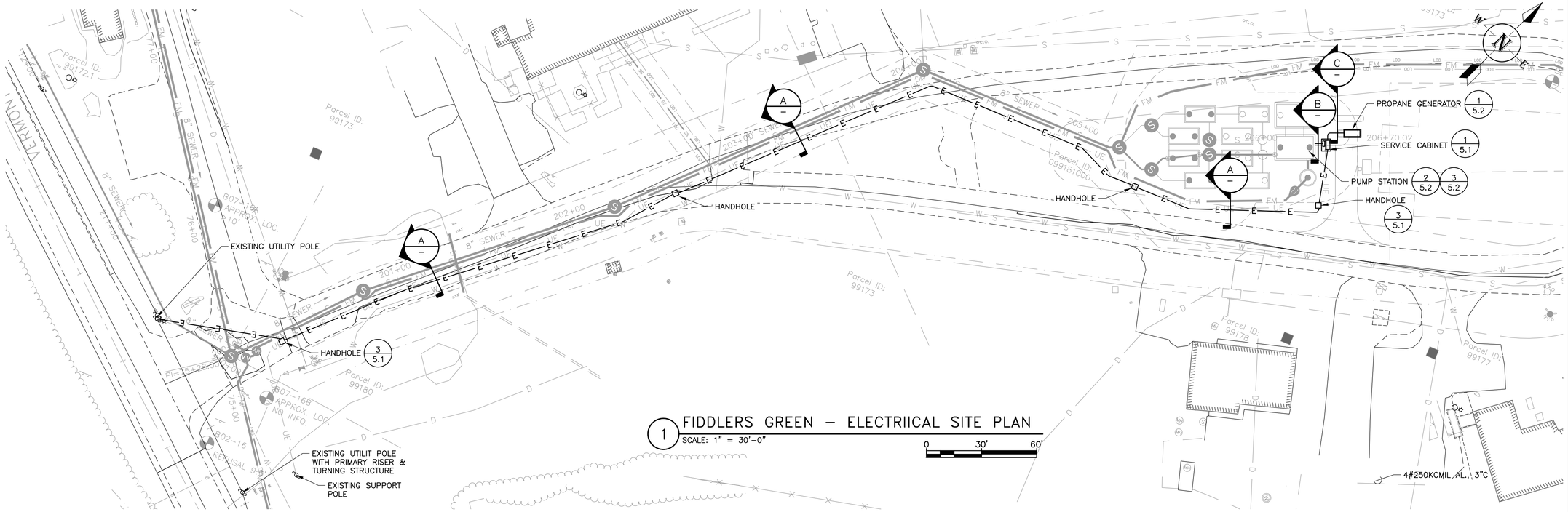

1 FIDDLERS GREEN – ELECTRIICAL SITE PLAN

SCALE: 1" = 30'–0"

0 30' 60'

PANEL No. LP

BUS	100 AMPERE	LOCATION	PANEL
PANEL RATING	10 KAIC	MOUNTING	SURFACE
SUPPLY VOLTAGE	240/120V	DRAWING No.	E1
SERVICE	SINGLE PHASE, 3 WIRE WITH GND BUS		

WIRING		DESCRIPTION	VA OR W		BREAKER		CKT.	BUS	CKT.	BREAKER		VA OR W		DESCRIPTION	WIRING	
WIRE	COND		ØA	ØB	POLE	A	NO	CONN	NO	POLE	A	ØA	ØB		COND	WIRE
2#12, 1#12G	3/4"	RECEPTACLE, LIGHT & HEATER	500		1	15	1	x	2	1	20	1500		BLOCK HEATER		
2#12, 1#12G	3/4"	COMMUNICATIONS EQUIPMENT		250	1	15	3	x	4	1	15		100	BATTERY CHARGER		
		SPACE					5	x	6					SPACE		
		TOTAL 1	500	250					TOTAL 2			1500	100			
		TOTAL 2	1500	100												
		TOTAL 1 + 2	2000	350												
		CONN. LOAD TOTAL	2350													
		AMPERES	10													

MAIN BREAKER	20A/2P	MAIN LUGS	
FEEDER ENTRANCE	TOP	ENCLOSURE TYPE	NEMA 1
FEEDER SIZE	3#12, 1#12G, 3/4"C	ACCESSORIES	
SOURCE	3KVA TRANSFORMEF		
PANEL TYPE	LOAD CENTER		

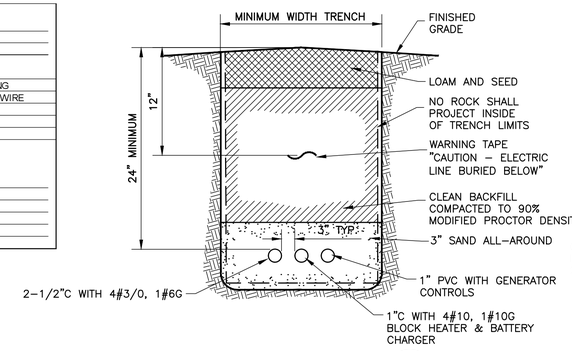

TRENCH SECTION C

NOT TO SCALE

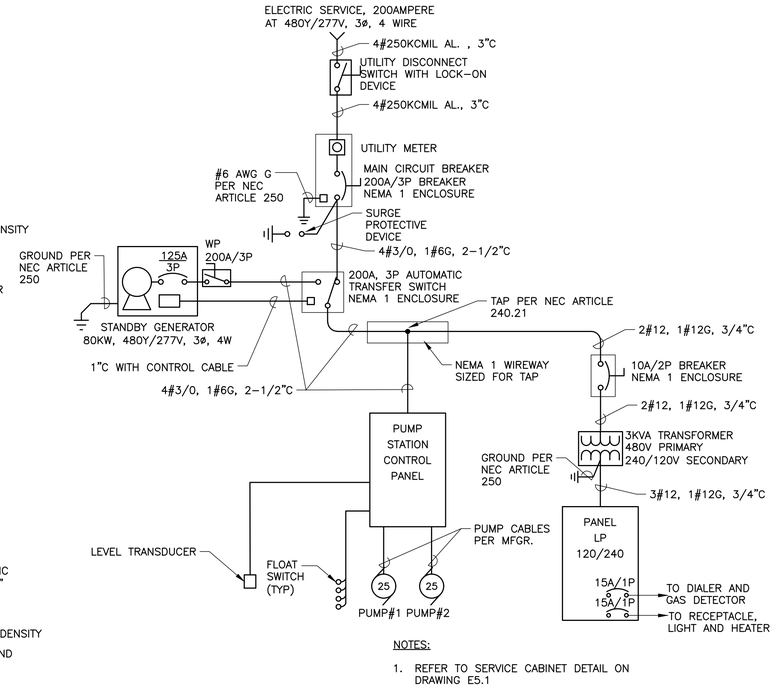

NOTES:

1. REFER TO SERVICE CABINET DETAIL ON DRAWING E5.1

2 FIDDLERS GREEN – ONE–LINE DIAGRAM

NO SCALE

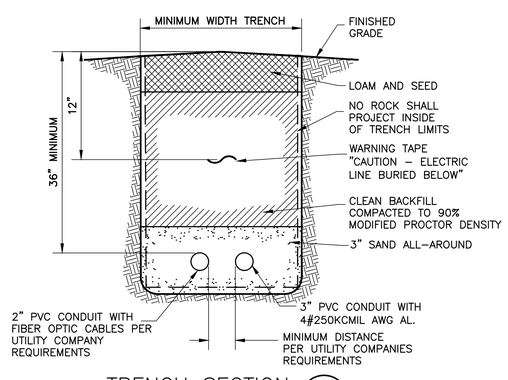

TRENCH SECTION A

NOT TO SCALE

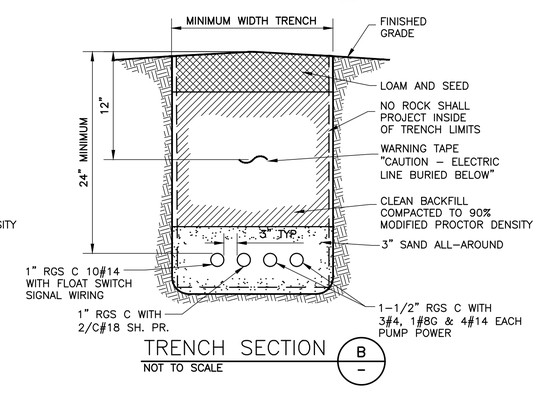

TRENCH SECTION B

NOT TO SCALE

BID SET
NOT FOR CONSTRUCTION 7/16/2026

DuBois & King inc.

www.dubois-king.com

© Copyright 2026 DuBois & King inc.

STATE OF VERMONT – ROBERT J. KIRBY – ELECTRICAL – LICENSED PROFESSIONAL ENGINEER

BID SET – NOT FOR CONSTRUCTION

REVISIONS

NUMBER	DATE	REVISION DESCRIPTION	BY

CLIENT NAME
TOWN OF WAITSFIELD

PROJECT NAME
WAITSFIELD COMMUNITY WASTEWATER SYSTEM

PROJECT ADDRESS
4144 MAIN STREET
WAITSFIELD, VERMONT 05673

SHEET TITLE
CONTRACT NO. 2
FIDDLERS GREEN ELECTRICAL PUMP STATION PLAN

D&K PROJECT #	PROJ. ENG.
227947	W.H.H
DRAWN BY	CHECKED BY
W.H.H.	W.H.H.

DATE
APRIL 8, 2026

SHEET NUMBER
E1.1

I:\2\227947 Waitsfield Water and Wastewater Feasibility Stud\Drawings\Electrical\227947 Pump Station.dwg 7/16/2026 4:21 PM

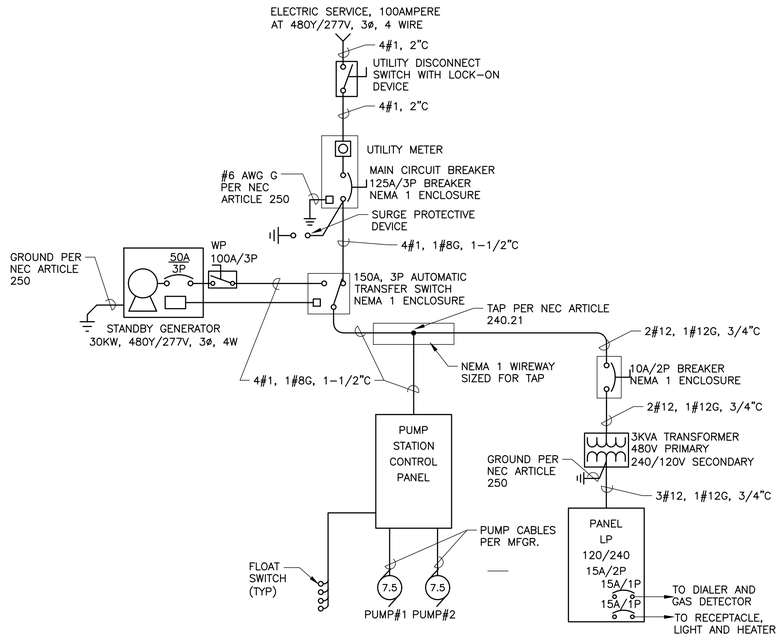

2 UPPER IRAVILLE – ONE-LINE DIAGRAM

NO SCALE

NOTES:

1. REFER TO SERVICE CABINET DETAIL ON DRAWING E5.1

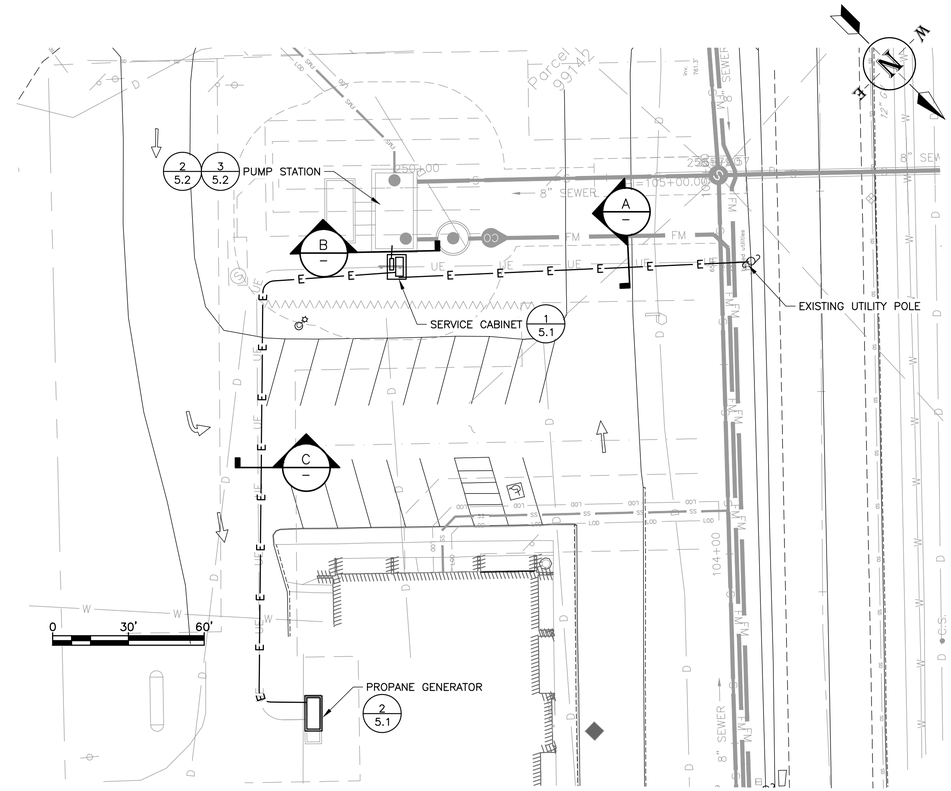

1 UPPER IRASVILLE – ELECTRIICAL STATION PLAN

SCALE: 1" = 20'-0"

PANEL No. LP

BUS	100 AMPERE	LOCATION	PANEL
PANEL RATING	10 KAIC	MOUNTING	SURFACE
SUPPLY VOLTAGE	240/120V	DRAWING No.	E1
SERVICE	SINGLE PHASE, 3 WIRE WITH GND BUS		

WIRING WIRE	WIRING COND	DESCRIPTION	VA OR W ØA	VA OR W ØB	BREAKER POLE	BREAKER A	CKT. NO	BUS CONN	CKT. NO	BREAKER POLE	BREAKER A	VA OR W ØA	VA OR W ØB	DESCRIPTION	WIRING COND	WIRING WIRE
2#12, 1#12G	3/4"	RECEPTACLE, LIGHT & HEATER	500		1	15	1	x	2	1	20	1500		BLOCK HEATER		
2#12, 1#12G	3/4"	COMMUNICATIONS EQUIPMENT		250	1	15	3	x	4	1	15		100	BATTERY CHARGER		
		SPACE					5	x	6					SPACE		
		TOTAL 1	500	250					TOTAL 2			1500	100			
		TOTAL 2	1500	100												
		TOTAL 1 + 2	2000	350												
		CONN. LOAD TOTAL	2350													
		AMPERES	10													

MAIN BREAKER	20A/2P	MAIN LUGS	
FEEDER ENTRANCE	TOP	ENCLOSURE TYPE	NEMA 1
FEEDER SIZE	3#12, 1#12G, 3/4"C	ACCESSORIES	
SOURCE	3KVA TRANSFORMEF		
PANEL TYPE	LOAD CENTER		

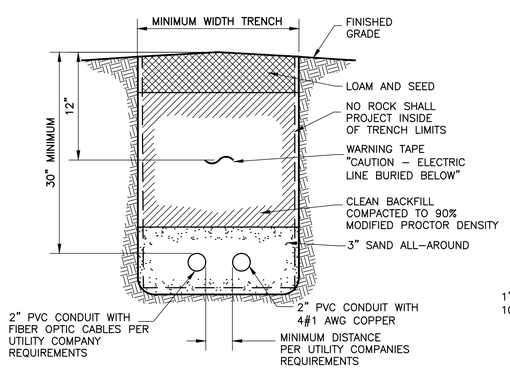

TRENCH SECTION A –

NOT TO SCALE

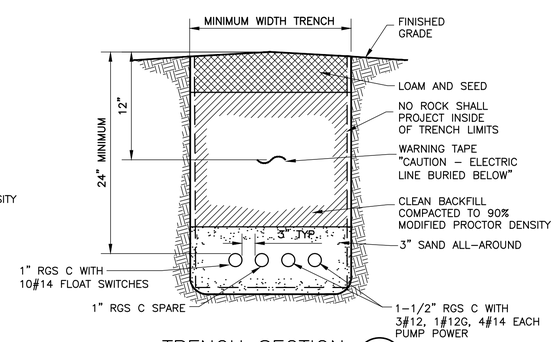

TRENCH SECTION B –

NOT TO SCALE

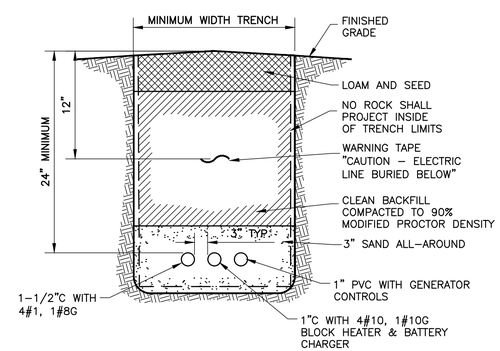

TRENCH SECTION C –

NOT TO SCALE

BID SET
NOT FOR CONSTRUCTION 7/16/2026

DuBois & King inc.
www.dubois-king.com
© Copyright 2026 DuBois & King inc.

STATE OF VERMONT – LICENSED PROFESSIONAL ENGINEER – NO. 7788 – ELECTRICAL – WILLIAM H. HOOPER – 7/16/26
NOT FOR CONSTRUCTION

REVISIONS			
NUMBER	DATE	REVISION DESCRIPTION	BY

CLIENT NAME
TOWN OF WAITSFIELD

PROJECT NAME
WAITSFIELD COMMUNITY WASTEWATER SYSTEM

PROJECT ADDRESS
4144 MAIN STREET
WAITSFIELD, VERMONT 05673

SHEET TITLE
CONTRACT NO. 2
UPPER IRASVILLE PUMP STATION - ELECTRICAL PLAN

D&K PROJECT #	PROJ. ENG.
227947	W.H.H
DRAWN BY	CHECKED BY
W.H.H.	W.H.H.

DATE
APRIL 8, 2026

SHEET NUMBER
E1.2

I:\2\227947 Waitsfield Water and Wastewater Feasibility Stud\Drawings\Electrical\227947 Pump Station.dwg 7/16/2026 4:21 PM

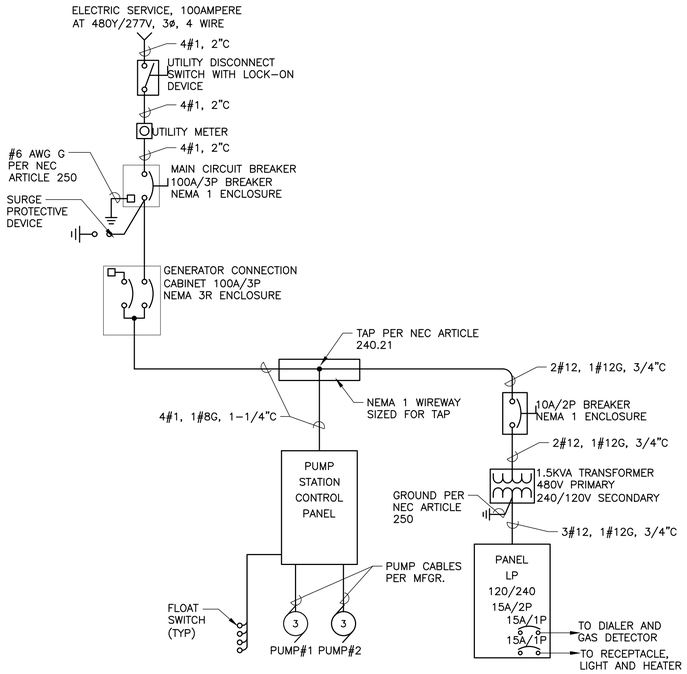

2 BRIDGE STREET SOUTH BRANCH – ONE-LINE DIAGRAM
NO SCALE

NOTES:

1. REFER TO SERVICE CABINET DETAIL ON DRAWING E5.2

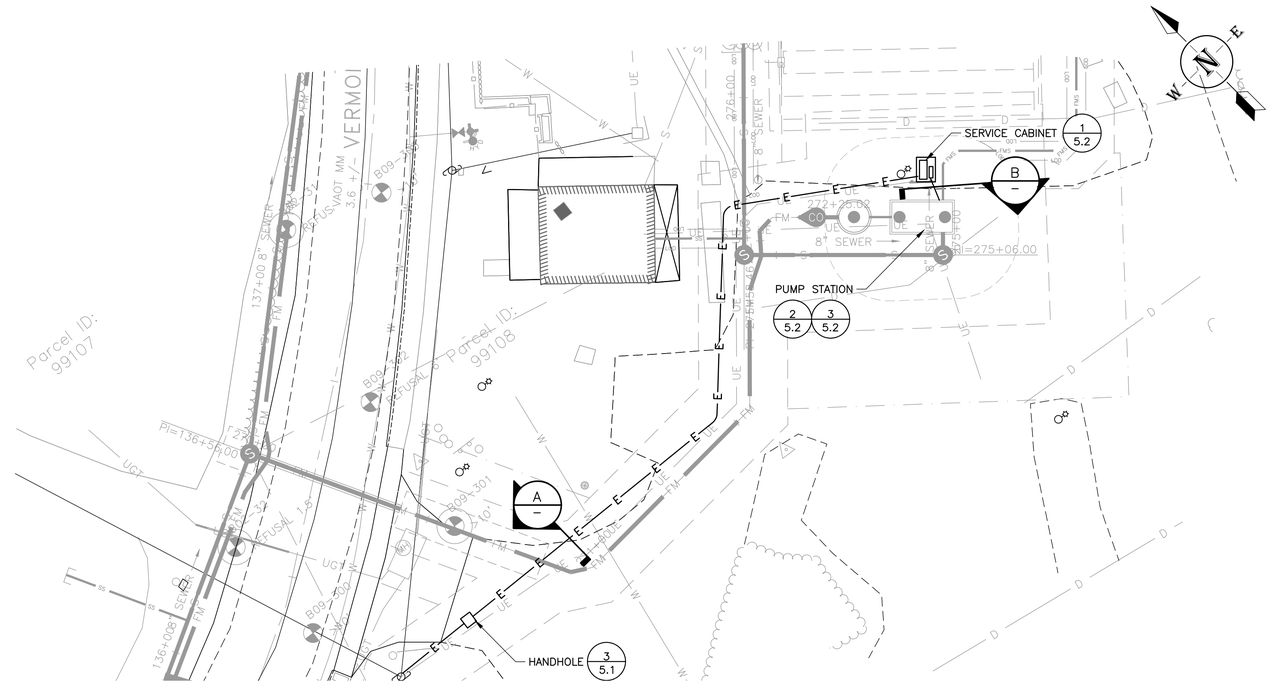

1 BRIDGE STREET SOUTH BRANCH – ELECTRIICAL SITE PLAN
SCALE: 1" = 20'-0"

0 20' 40'

PANEL No. LP

BUS	100 AMPERE	LOCATION	PANEL
PANEL RATING	10 KAIC	MOUNTING	SURFACE
SUPPLY VOLTAGE	240/120V	DRAWING No.	E1
SERVICE	SINGLE PHASE, 3 WIRE WITH GND BUS		

WIRING		DESCRIPTION	VA OR W		BREAKER		CKT.	BUS	CKT.	BREAKER		VA OR W		DESCRIPTION	WIRING	
WIRE	COND		ØA	ØB	POLE	A	NO	CONN	NO	POLE	A	ØA	ØB		COND	WIRE
2#12, 1#12G	3/4"	RECEPTACLE, LIGHT & HEATER	500		1	15	1	x	2	1	20			SPARE		
2#12, 1#12G	3/4"	COMMUNICATIONS EQUIPMENT		250	1	15	3		x	4	1	15		SPARE		
		SPACE					5	x		6				SPACE		
		TOTAL 1	500	250					TOTAL 2							
		TOTAL 2														
		TOTAL 1 + 2	500	250												
		CONN. LOAD TOTAL	750													
		AMPERES	3													

MAIN BREAKER	20A/2P	MAIN LUGS	
FEEDER ENTRANCE	TOP	ENCLOSURE TYPE	NEMA 1
FEEDER SIZE	3#12, 1#12G, 3/4"C	ACCESSORIES	
SOURCE	3KVA TRANSFORMEF		
PANEL TYPE	LOAD CENTER		

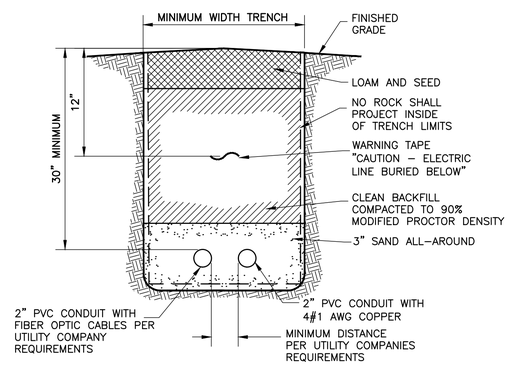

TRENCH SECTION A
NOT TO SCALE

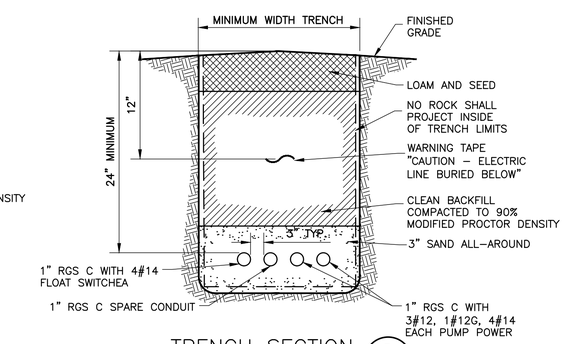

TRENCH SECTION B
NOT TO SCALE

BID SET
NOT FOR CONSTRUCTION 7/16/2026

DuBois & King inc.
www.dubois-king.com
© Copyright 2026 DuBois & King inc.

STATE OF VERMONT
WILLIAM H. HOBAN
NO. 11270
ELECTRICAL
LICENSED
PROFESSIONAL ENGINEER

NOT FOR CONSTRUCTION

REVISIONS

NUMBER	DATE	REVISION DESCRIPTION	BY

CLIENT NAME
TOWN OF WAITSFIELD

PROJECT NAME
WAITSFIELD COMMUNITY WASTEWATER SYSTEM

PROJECT ADDRESS
4144 MAIN STREET
WAITSFIELD, VERMONT 05673

SHEET TITLE
CONTRACT NO. 2
BRIDGE STREET SOUTH BRANCH PUMP STATION - ELECTRICAL PLAN

D&K PROJECT #	PROJ. ENG.
227947	W.H.H
DRAWN BY	CHECKED BY
W.H.H.	W.H.H.

DATE
APRIL 8, 2026

SHEET NUMBER
E1.3

I:\2\227947 Waitsfield Water and Wastewater Feasibility Stud\Drawings\Electrical\227947 Pump Station.dwg 7/16/2026 4:21 PM

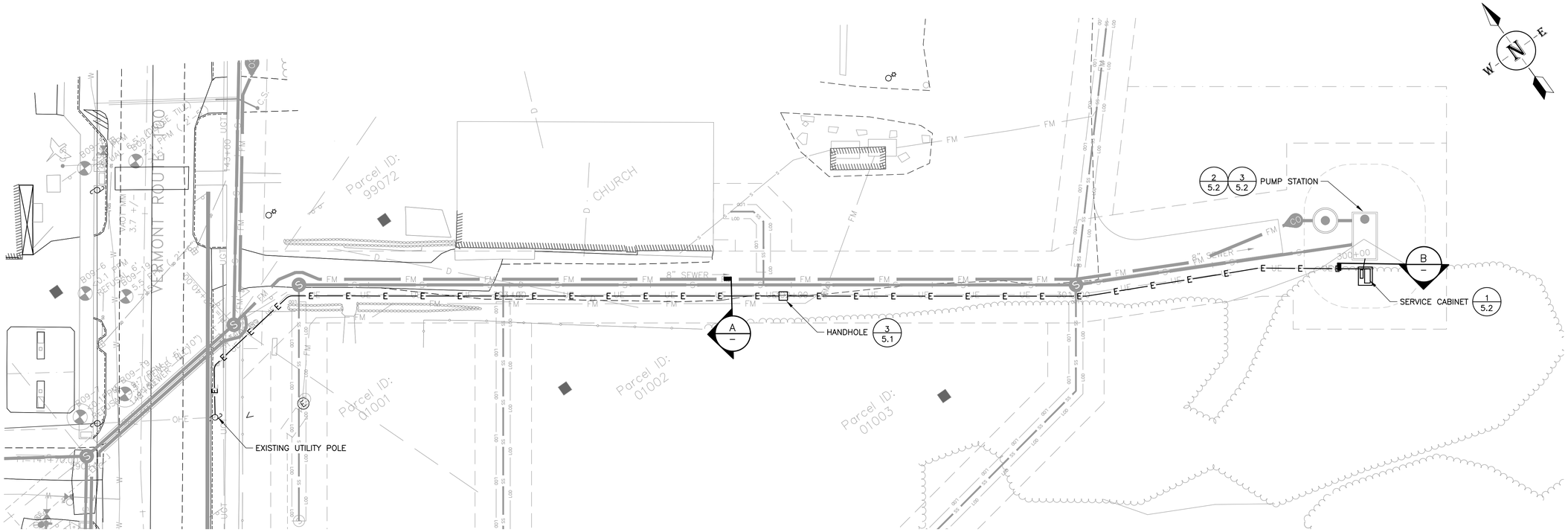

1 CHURCH STREET – ELECTRIICAL SITE PLAN

SCALE: 1" = 20'-0"

0 20' 40'

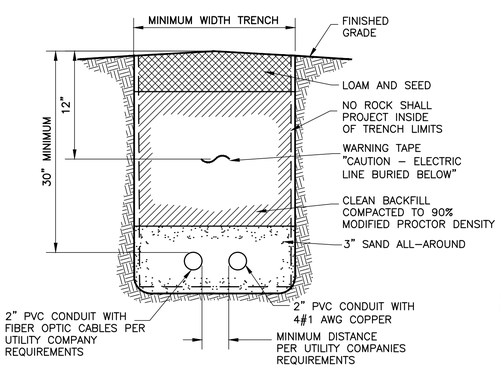

TRENCH SECTION (A)

NOT TO SCALE

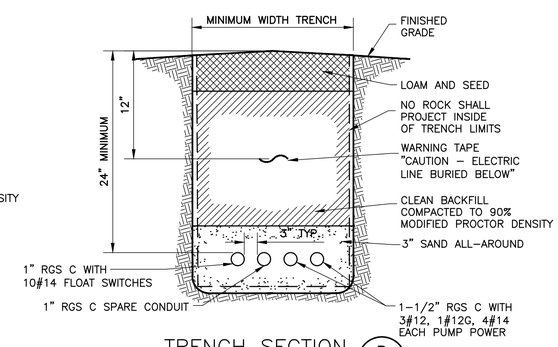

TRENCH SECTION (B)

NOT TO SCALE

PANEL No. LP

BUS	100 AMPERE	LOCATION	PANEL
PANEL RATING	10 KAIC	MOUNTING	SURFACE
SUPPLY VOLTAGE	240/120V	DRAWING No.	E1
SERVICE	SINGLE PHASE, 3 WIRE WITH GND BUS		

WIRING		DESCRIPTION	VA OR W		BREAKER		CKT.	bus	CKT.	BREAKER		VA OR W		DESCRIPTION	WIRING	
WIRE	COND		ØA	ØB	POLE	A	NO	CONN	NO	POLE	A	ØA	ØB		COND	WIRE
2#12, 1#12G	3/4"	RECEPTACLE, LIGHT & HEATER	500		1	15	1	x	2	1	20			SPARE		
2#12, 1#12G	3/4"	COMMUNICATIONS EQUIPMENT		250	1	15	3	x	4	1	15			SPARE		
		SPACE					5	x	6					SPACE		
		TOTAL 1	500	250					TOTAL 2							
		TOTAL 2														
		TOTAL 1 + 2	500	250												
		CONN. LOAD TOTAL	750													
		AMPERES	3													

MAIN BREAKER	20A/2P	MAIN LUGS	
FEEDER ENTRANCE	TOP	ENCLOSURE TYPE	NEMA 1
FEEDER SIZE	3#12, 1#12G, 3/4"C	ACCESSORIES	
SOURCE	3KVA TRANSFORMER		
PANEL TYPE	LOAD CENTER		

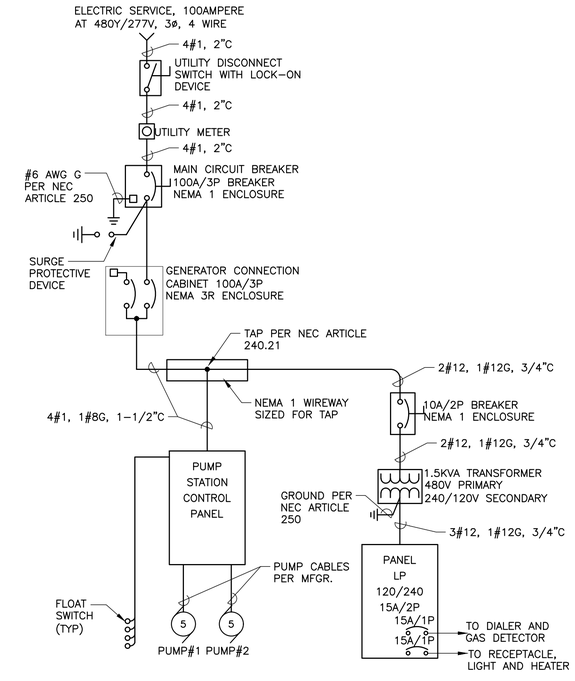

2 CHURCH STREET – ONE-LINE DIAGRAM

NO SCALE

NOTES:

1. REFER TO SERVICE CABINET DETAIL ON DRAWING E5.2

BID SET
NOT FOR CONSTRUCTION 7/16/2026

DuBois & King inc.

www.dubois-king.com

© Copyright 2026 DuBois & King inc.

STATE OF VERMONT – MICHAEL J. HOWARD – ELECTRICAL – LICENSED PROFESSIONAL ENGINEER

BID SET
NOT FOR CONSTRUCTION

REVISIONS

NUMBER	DATE	REVISION DESCRIPTION	BY

CLIENT NAME
TOWN OF WAITSFIELD

PROJECT NAME
WAITSFIELD COMMUNITY WASTEWATER SYSTEM

PROJECT ADDRESS
4144 MAIN STREET
WAITSFIELD, VERMONT 05673

SHEET TITLE
CONTRACT NO. 2
CHURCH STREET PUMP STATION - ELECTRICAL PLAN

D&K PROJECT #	PROJ. ENG.
227947	W.H.H
DRAWN BY	CHECKED BY
W.H.H.	W.H.H.

DATE
APRIL 8, 2026

SHEET NUMBER
E1.4

I:\2\227947 Waitsfield Water and Wastewater Feasibility Stud\Drawings\Electrical\227947 Pump Station.dwg 7/16/2026 4:21 PM

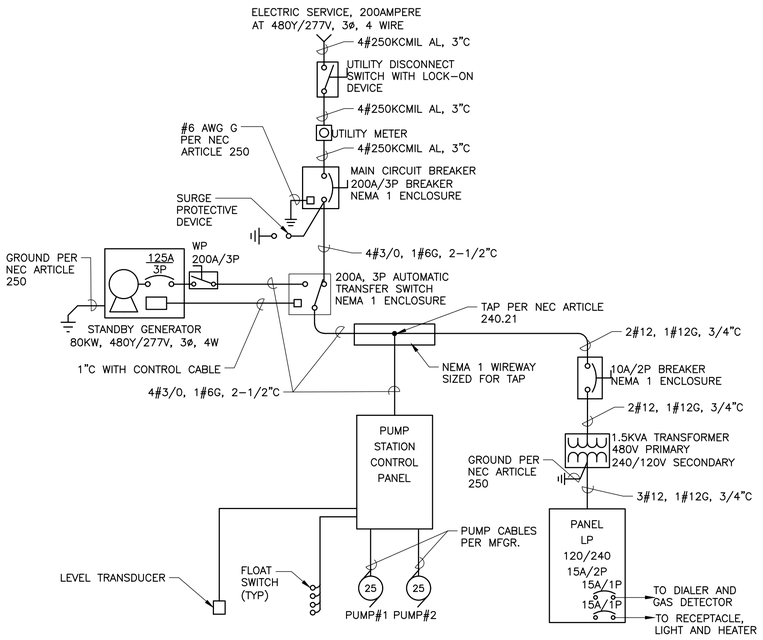

2 ELEMENTARY SCHOOL – ONE-LINE DIAGRAM

NO SCALE

NOTES:

1. REFER TO SERVICE CABINET DETAIL ON DRAWING E5.1

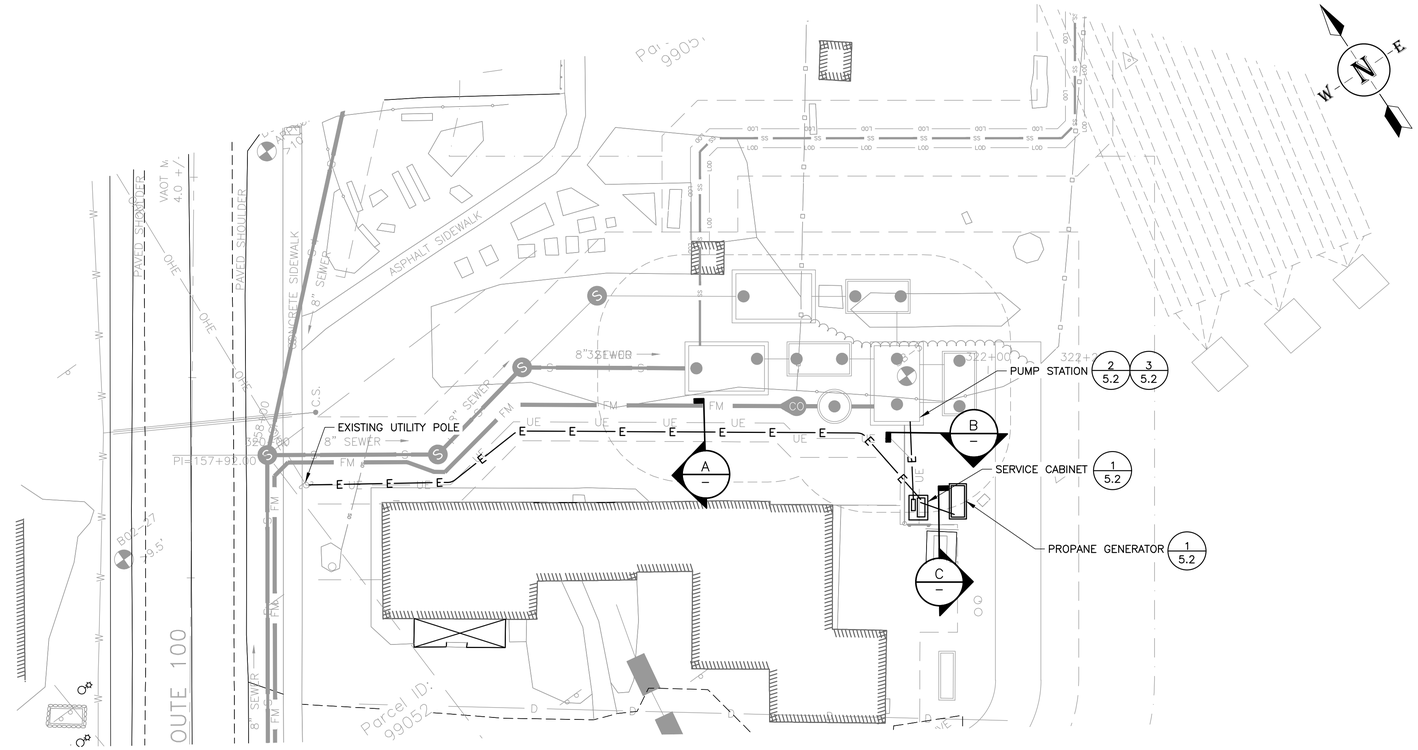

1 ELEMENTARY SCHOOL – ELECTRIICAL SITE PLAN

SCALE: 1" = 20'-0"

0 20' 40'

BUS	100 AMPERE																		
PANEL RATING	10 KAIC																		
SUPPLY VOLTAGE	240/120V																		
SERVICE	SINGLE PHASE, 3 WIRE WITH GND BUS																		

PANEL No. LP

LOCATION	PANEL
MOUNTING	SURFACE
DRAWING No.	E1

WIRING		DESCRIPTION	VA OR W		BREAKER		CKT.	BUS	CKT.	BREAKER		VA OR W		DESCRIPTION	WIRING	
WIRE	COND		ØA	ØB	POLE	A	NO	CONN	NO	POLE	A	ØA	ØB		COND	WIRE
2#12, 1#12G	3/4"	RECEPTACLE, LIGHT & HEATER	500		1	15	1	x	2	1	20	1500		BLOCK HEATER		
2#12, 1#12G	3/4"	COMMUNICATIONS EQUIPMENT		250	1	15	3	x	4	1	15		100	BATTERY CHARGER		
		SPACE					5	x	6					SPACE		
		TOTAL 1	500	250					TOTAL 2			1500	100			
		TOTAL 2	1500	100												
		TOTAL 1 + 2	2000	350												
		CONN. LOAD TOTAL	2350													
		AMPERES	10													

MAIN BREAKER	20A/2P
FEEDER ENTRANCE	TOP
FEEDER SIZE	3#12, 1#12G, 3/4"C
SOURCE	3KVA TRANSFORMEF
PANEL TYPE	LOAD CENTER

MAIN LUGS	
ENCLOSURE TYPE	NEMA 1
ACCESSORIES	

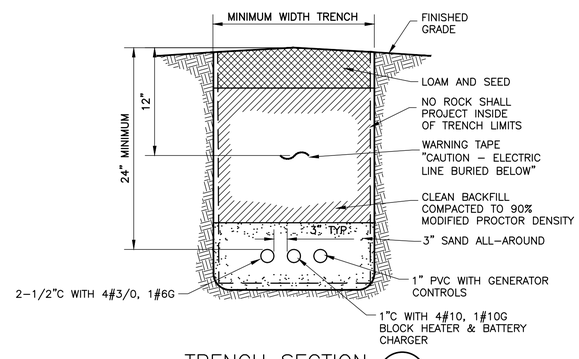

TRENCH SECTION C

NOT TO SCALE

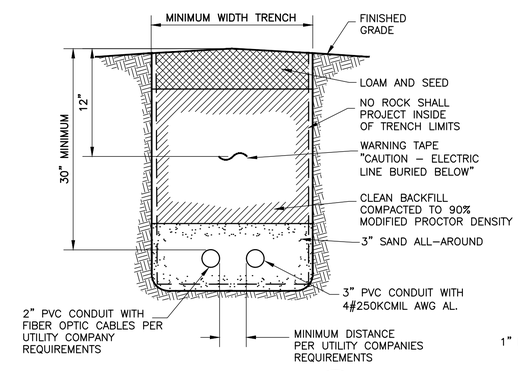

TRENCH SECTION A

NOT TO SCALE

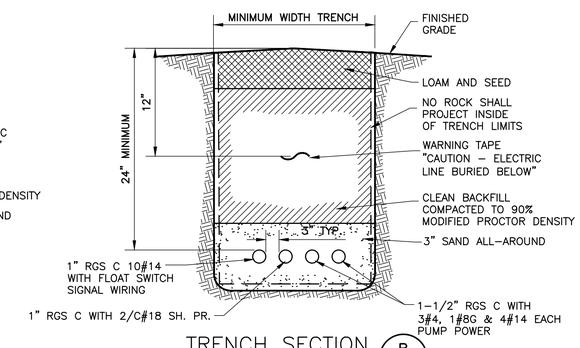

TRENCH SECTION B

NOT TO SCALE

BID SET
NOT FOR CONSTRUCTION 7/16/2026

DuBois & King inc.

www.dubois-king.com

© Copyright 2026 DuBois & King inc.

STATE OF VERMONT – DISTRICT ELECTRICAL INSPECTOR – LICENSED PROFESSIONAL ENGINEER

DISTRICT ELECTRICAL INSPECTOR
CONSTRUCTION

REVISIONS			
NUMBER	DATE	REVISION DESCRIPTION	BY

CLIENT NAME
TOWN OF WAITSFIELD

PROJECT NAME
WAITSFIELD COMMUNITY WASTEWATER SYSTEM

PROJECT ADDRESS
4144 MAIN STREET
WAITSFIELD, VERMONT 05673

SHEET TITLE
CONTRACT NO. 2
ELEMENTARY SCHOOL PUMP STATION ELECTRICAL PLAN

D&K PROJECT #	PROJ. ENG.
227947	W.H.H
DRAWN BY	CHECKED BY
W.H.H.	W.H.H.

DATE
APRIL 8, 2026

SHEET NUMBER
E1.5

I:\2\227947 Waitsfield Water and Wastewater Feasibility Stud\Drawings\Electrical\227947 Pump Station.dwg 7/16/2026 4:21 PM

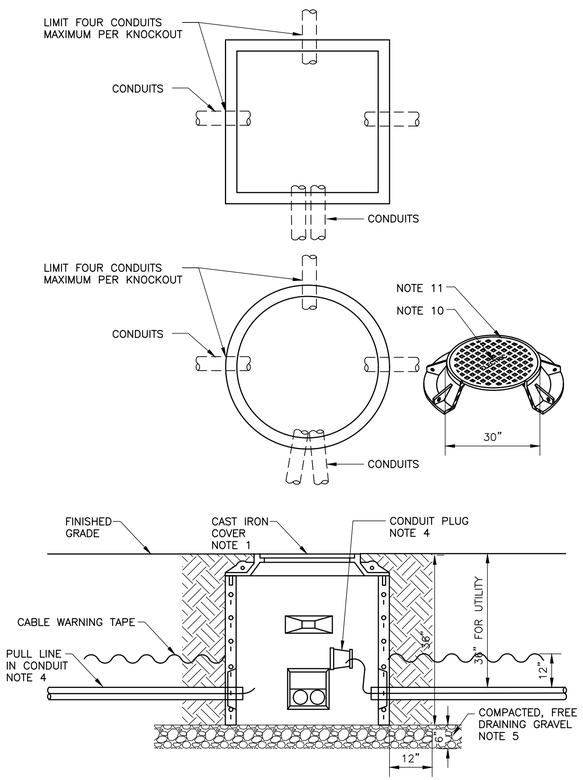

3 HANDHOLE DETAIL
NOT TO SCALE

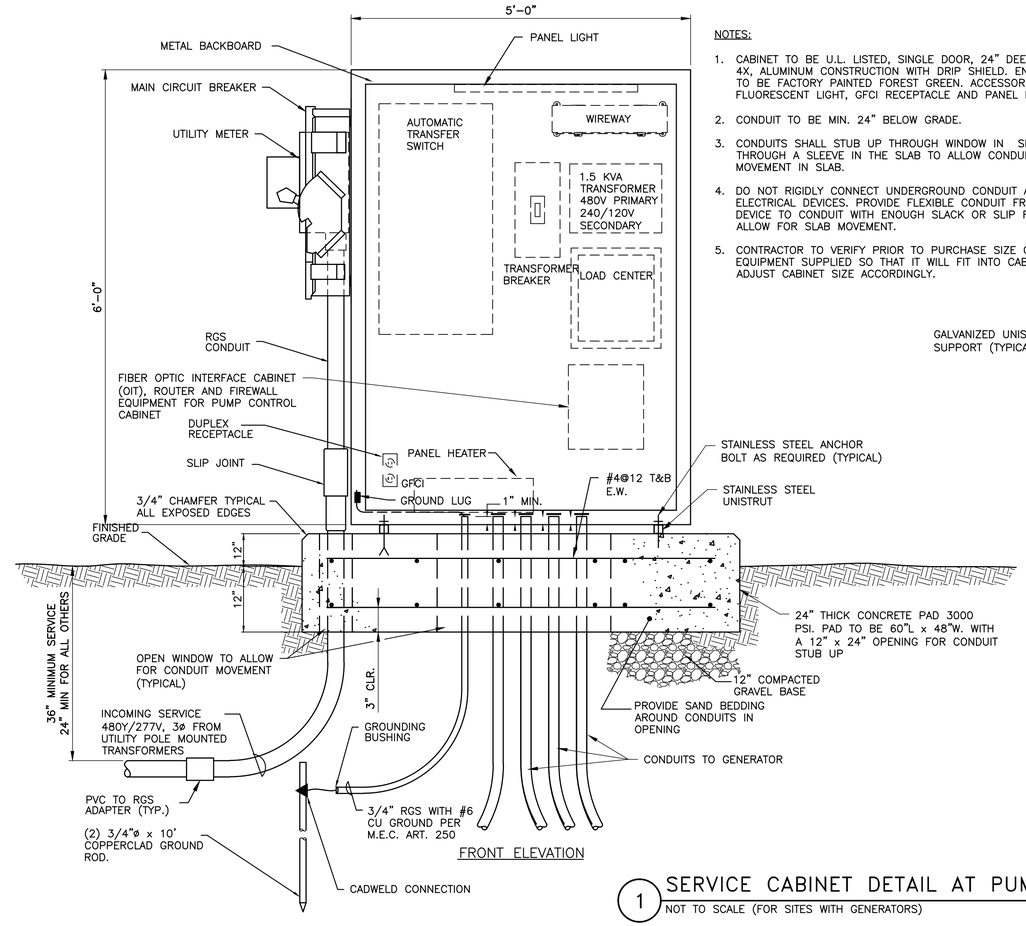

FRONT ELEVATION

NOTES:

1. CABINET TO BE U.L. LISTED, SINGLE DOOR, 24" DEEP NEMA 4X, ALUMINUM CONSTRUCTION WITH DRIP SHIELD. ENCLOSURE TO BE FACTORY PAINTED FOREST GREEN. ACCESSORIES TO BE FLUORESCENT LIGHT, GFCI RECEPTACLE AND PANEL HEATER
2. CONDUIT TO BE MIN. 24" BELOW GRADE.
3. CONDUITS SHALL STUB UP THROUGH WINDOW IN SLAB OR THROUGH A SLEEVE IN THE SLAB TO ALLOW CONDUIT MOVEMENT IN SLAB.
4. DO NOT RIGIDLY CONNECT UNDERGROUND CONDUIT AND ELECTRICAL DEVICES. PROVIDE FLEXIBLE CONDUIT FROM DEVICE TO CONDUIT WITH ENOUGH SLACK OR SLIP FITTING TO ALLOW FOR SLAB MOVEMENT.
5. CONTRACTOR TO VERIFY PRIOR TO PURCHASE SIZE OF EQUIPMENT SUPPLIED SO THAT IT WILL FIT INTO CABINET AND ADJUST CABINET SIZE ACCORDINGLY.

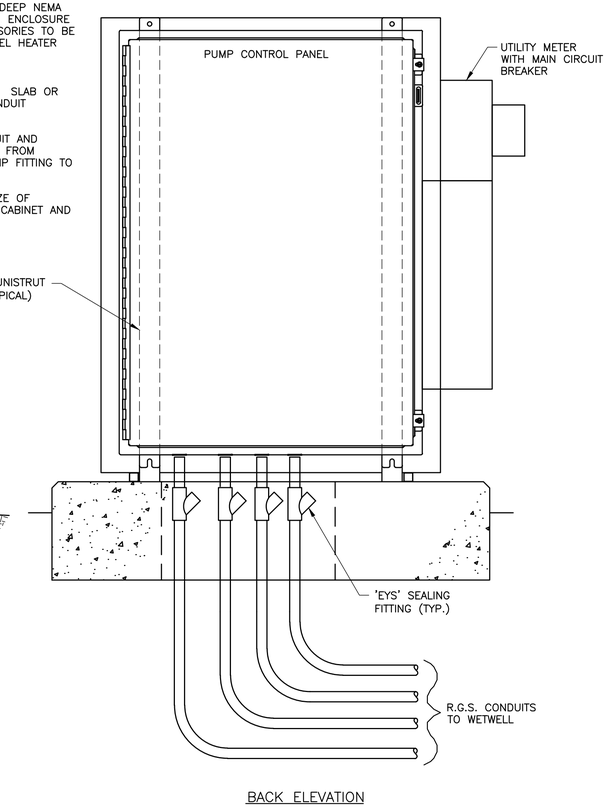

BACK ELEVATION

1 SERVICE CABINET DETAIL AT PUMP STATION
NOT TO SCALE (FOR SITES WITH GENERATORS)

HANDHOLE GENERAL NOTES:

1. INSTALL 36"D X 36"H ROUND OR 36" SQUARE X 36"H HANDHOLE, AND CAST IRON FRAME.
2. INSTALL CONDUIT, WITH ALL JOINTS CEMENTED, THROUGH KNOCKOUT TO 4" INSIDE HANDHOLE. TERMINATE CONDUIT RUN WITH END BELL. CONDUIT DESTINATION TO BE PERMANENTLY MARKED ON CONDUIT END. CONDUIT SIZE AS SHOWN ON DRAWING SCH. 40 PVC. LIMIT (4) 4" DIAMETER CONDUITS PER KNOCKOUT.
3. GAPS AROUND CONDUIT AT KNOCKOUT OPENINGS SHALL BE SEALED WITH CEMENT MORTAR TO PREVENT BACKFILL FROM ENTERING HANDHOLE.
4. INSTALL 1/4" DIAMETER NYLON PULL LINE IN EACH DUCT, INCLUDING 10' SLACK, AND SECURE TO CONDUIT PLUG. PLUGGED CONDUIT TO BE LEFT ACCESSIBLE.
5. INSTALL ON VIRGIN OR WELL TAMPED GRAVEL. WHERE POOR SOIL EXISTS, REMOVE TO 6" BELOW BOTTOM OF HANDHOLE AND BACKFILL WITH COMPACTED CLEAN GRAVEL, FREE OF FOREIGN MATTER AND DEBRIS, AND EXTENDING 12" PST EDGE OF STRUCTURE. REMAINING BACKFILL SHALL NOT CONTAIN ASHES, FROZEN MATERIAL DEBRIS OR STONES LAGER THAN 2" IN MAXIMUM DIA.
6. WHEN INSTALLING CABLE , UTILIZE PULLING EYELETS PROVIDE IN HANDHOLE.
7. THE GRAY CAST IRON SHALL CONFORM TO ASTM A48-1983 CLASS 30-B.
8. DESIGN LOADING SHALL BE IN ACCORDANCE WITH AASHTO HS20-1983.
9. (5) 1-1/4" DIA. HOLES, 5" FROM EDGE AND 72 DEGREE APART.
10. "ELECTRIC" LETTERS 2-1/2" HIGH.
11. FOUNDRY NAME OR INSIGNIA AND DATE (YEAR MANUFACTURED) SHALL BE CAST IN UNDERSIDE OF COVER.
12. RIBS TO BE TAPERED FROM 1/2" TO 3/4".
13. LIFTING NOTCH ADJACENT TO EACH PICK HOLE.
14. THE 30" COVER FITS INTO THE 30" FRAME. WEIGHT OF 30" COVER APPROXIMATELY 265 POUNDS.

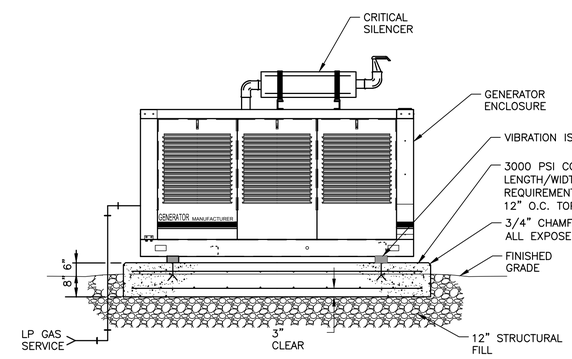

2 GENERATOR MOUNTING DETAIL
NOT TO SCALE

NOTES:

1. PROVIDE 6"x6" WINDOW IN SLAB AND SLIP JOINT AT CONDUIT TERMINATIONS.
2. ALL WORK SHALL BE DONE PER PLUMBING AND GAS CODE AND LOCAL GAS COMPANY REQUIREMENTS. EXACT GAS PIPE SIZE AND PRESSURE AS PER GENERATOR MANUFACTURER'S REQUIREMENTS.

BID SET
NOT FOR CONSTRUCTION 7/16/2026

DuBois & King inc.
www.dubois-king.com
© Copyright 2026 DuBois & King inc.

STATE OF VERMONT
WILLIAM H. HOWARD III
No. 10788
LICENSED PROFESSIONAL ENGINEER
NOT FOR CONSTRUCTION

REVISIONS

NUMBER	DATE	REVISION DESCRIPTION	BY

CLIENT NAME
TOWN OF WAITSFIELD

PROJECT NAME
WAITSFIELD COMMUNITY WASTEWATER SYSTEM

PROJECT ADDRESS
4144 MAIN STREET
WAITSFIELD, VERMONT 05673

SHEET TITLE
CONTRACT NO. 2
ELECTRICAL DETAILS

D&K PROJECT #	PROJ. ENG.
227947	W.H.H
DRAWN BY	CHECKED BY
W.H.H.	W.H.H.

DATE
APRIL 8, 2026

SHEET NUMBER
E5.1

SHEET: 85 of 86

I:\2\227947 Waitsfield Water and Wastewater Feasibility Stud\Drawings\Electrical\227947 Pump Station.dwg 7/16/2026 4:21 PM

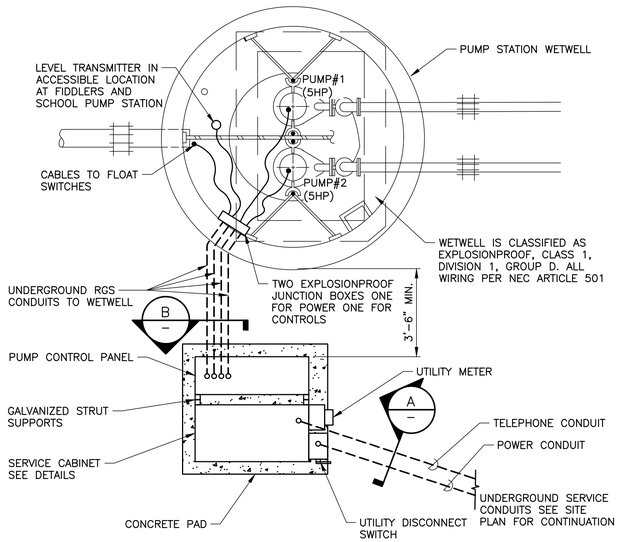

2 TYPICAL PUMP STATION PLAN

NOT TO SCALE

NOTES:

1. REFER TO SITE PLANS FOR EXACT PLAN LAYOUT, DETAIL IS FOR GENERAL CONFIGURATION OF EQUIPMENT ONLY.

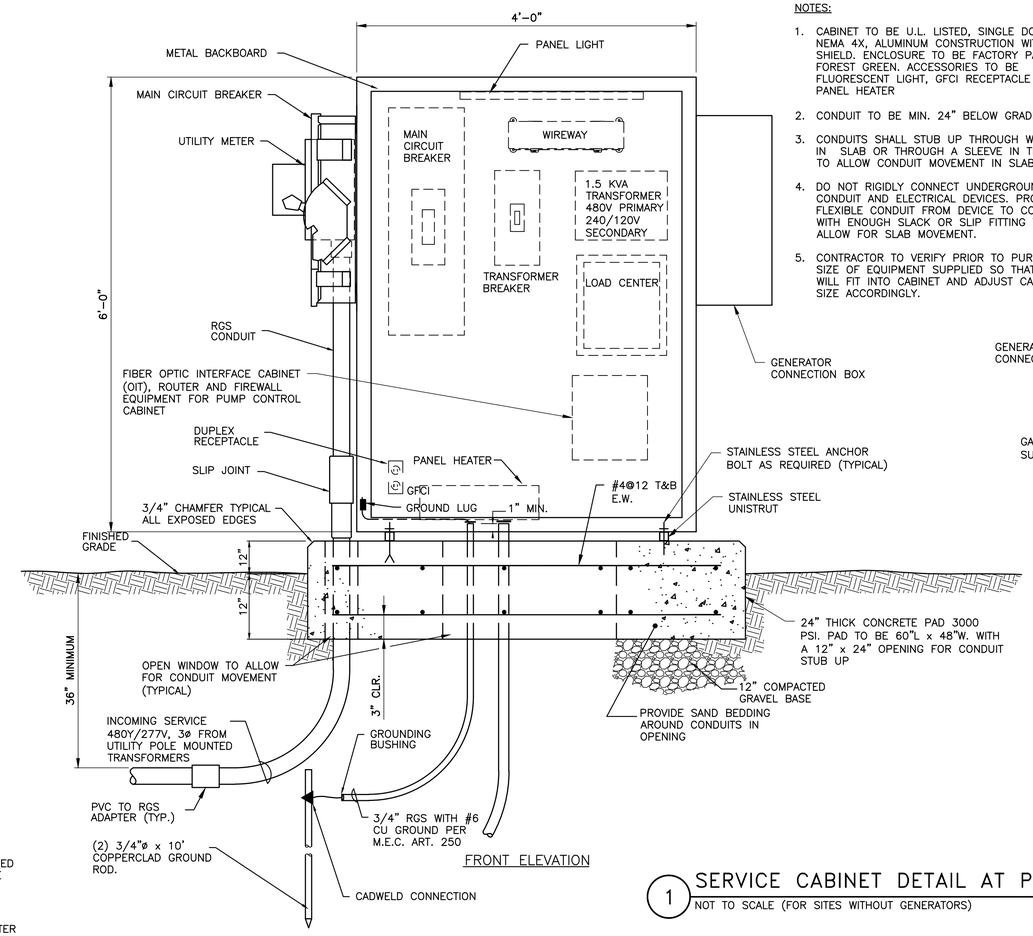

FRONT ELEVATION

NOTES:

1. CABINET TO BE U.L. LISTED, SINGLE DOOR, NEMA 4X, ALUMINUM CONSTRUCTION WITH DRIP SHIELD. ENCLOSURE TO BE FACTORY PAINTED FOREST GREEN. ACCESSORIES TO BE FLUORESCENT LIGHT, GFCI RECEPTACLE AND PANEL HEATER
2. CONDUIT TO BE MIN. 24" BELOW GRADE.
3. CONDUITS SHALL STUB UP THROUGH WINDOW IN SLAB OR THROUGH A SLEEVE IN THE SLAB TO ALLOW CONDUIT MOVEMENT IN SLAB.
4. DO NOT RIGIDLY CONNECT UNDERGROUND CONDUIT AND ELECTRICAL DEVICES. PROVIDE FLEXIBLE CONDUIT FROM DEVICE TO CONDUIT WITH ENOUGH SLACK OR SLIP FITTING TO ALLOW FOR SLAB MOVEMENT.
5. CONTRACTOR TO VERIFY PRIOR TO PURCHASE SIZE OF EQUIPMENT SUPPLIED SO THAT IT WILL FIT INTO CABINET AND ADJUST CABINET SIZE ACCORDINGLY.

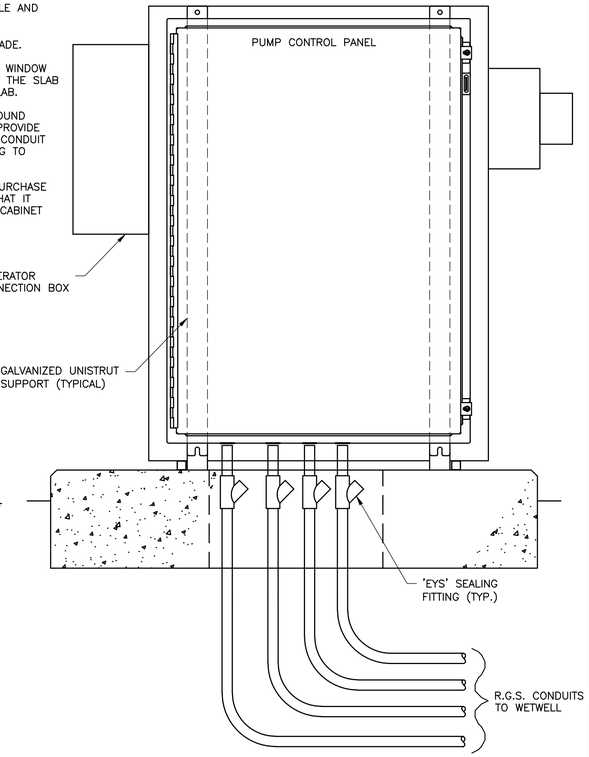

BACK ELEVATION

1 SERVICE CABINET DETAIL AT PUMP STATION

NOT TO SCALE (FOR SITES WITHOUT GENERATORS)

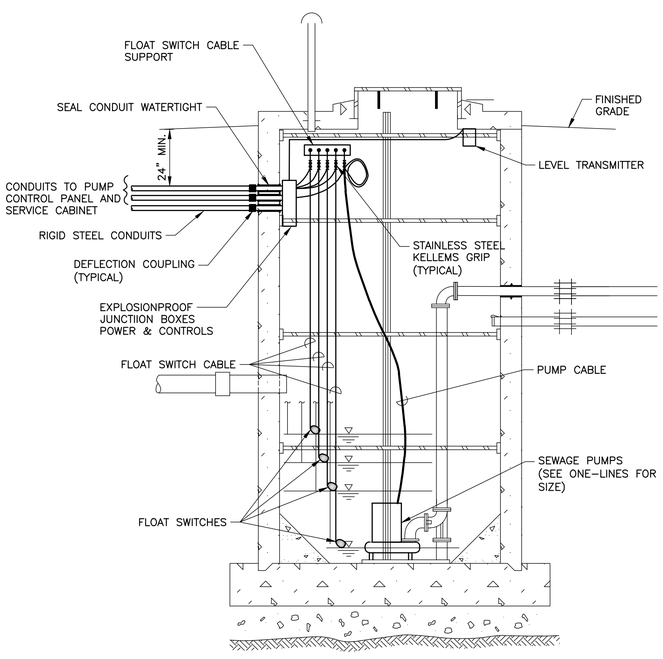

3 PUMP STATION SECTION

NOT TO SCALE

BID SET
NOT FOR CONSTRUCTION
7/16/2026

DuBois & King inc.
www.dubois-king.com
© Copyright 2026 DuBois & King inc.

STATE OF VERMONT
MARK NORMAN DUBOIS
No. 4750
ELECTRICAL
PROFESSIONAL ENGINEER

LICENSED PROFESSIONAL ENGINEER

REVISIONS			
NUMBER	DATE	REVISION DESCRIPTION	BY

CLIENT NAME
TOWN OF WAITSFIELD

PROJECT NAME
WAITSFIELD COMMUNITY WASTEWATER SYSTEM

PROJECT ADDRESS
4144 MAIN STREET
WAITSFIELD, VERMONT 05673

SHEET TITLE
CONTRACT NO. 2
ELECTRICAL DETAILS

D&K PROJECT #	PROJ. ENG.
227947	W.H.H
DRAWN BY	CHECKED BY
W.H.H.	W.H.H.

DATE
APRIL 8, 2026

SHEET NUMBER
E5.2

SHEET: 86 of 86

I:\21\227947 Waitsfield Water and Wastewater Feasibility Stud\Drawings\Electrical\227947 Pump Station.dwg 7/16/2026 4:22 PM